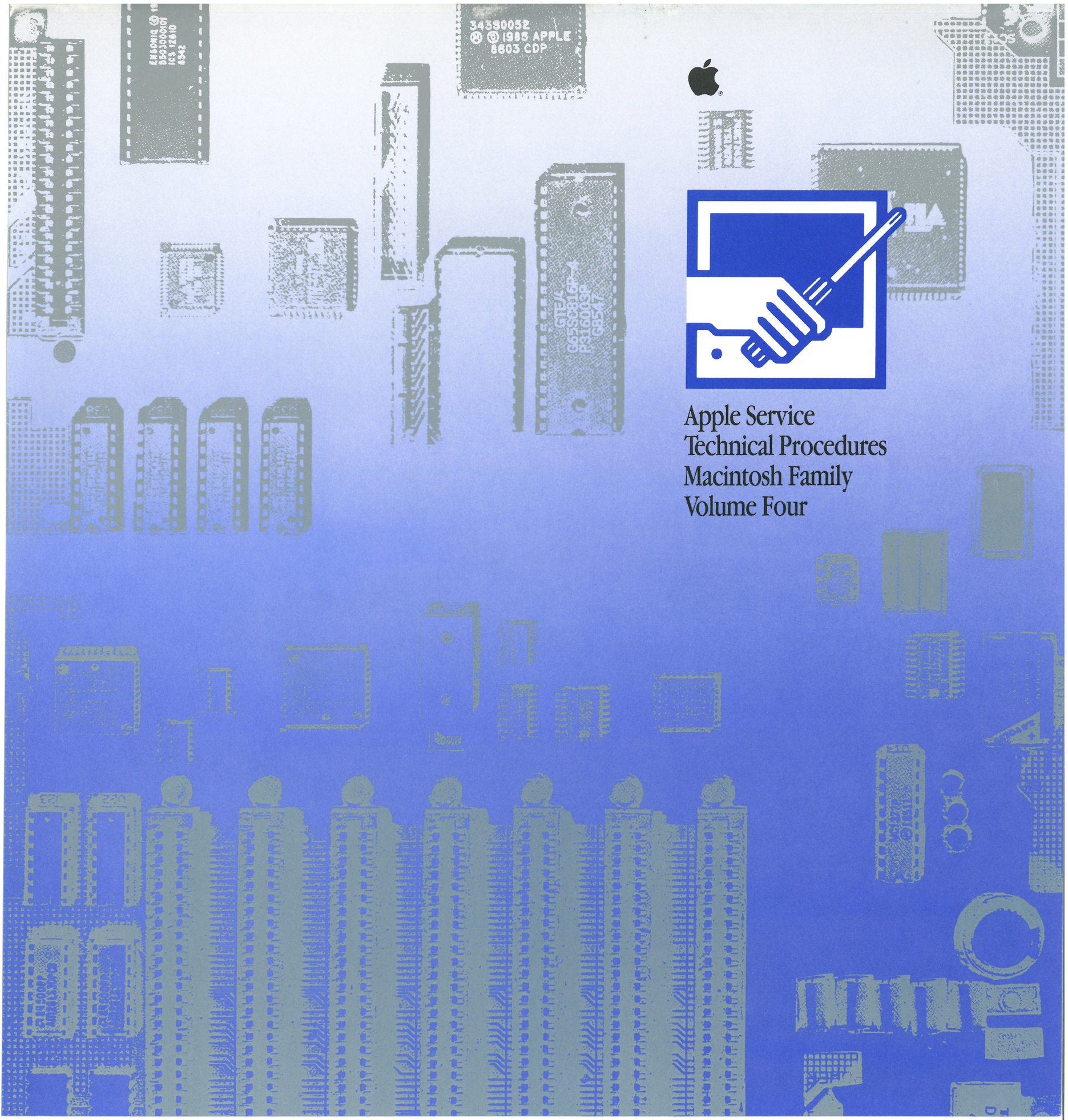


# Apple Service Technical Procedures Macintosh Family Volume Four

# Apple Service Technical Procedures Macintosh Family

## Volume Four

PN: 072-0228

Copyright 1982-1989 by Apple Computer Inc. March, 1991

Apple Technical Procedures

# Macintosh Family
## Volume Four

## Table of Contents


| | | |
|---|---|---|
| | --Title page (contains build date) | – |
| **Macintosh Family Cards** | --Table of Contents | 08/90 |
| | --SE-Bus PC Card | 03/89 |
| | --Macintosh II Video Cards | 03/89 |
| | (except page 2.4) | 11/90 |
| | (except pages 2.2, 2.3, 2.5-2.11) | 06/90 |
| | (except pages 2.1, 2.4, 2.12) | 08/90 |
| | --Illustrated Parts List | 03/89 |
| | --Apple IIe Card | 03/91 |
| | (except page IPL.15) | 11/90 |
| | (except pages IPL.8, IPL.9) | 05/89 |
| | (except pages IPL.10, IPL.11) | 07/89 |
| | (except pages IPL.6, IPL.7) | 09/89 |
| | (except pages IPL.12, IPL.13) | 03/90 |
| | (except pages IPL.1, IPL.14) | 08/90 |
| **Macintosh ADB Input Devices** | --Table of Contents | 11/90 |
| | --Keyboard Take-Apart | 11/90 |
| | --Extended Keyboard II | 10/90 |
| | --Illustrated Parts List | 03/90 |
| | (except pages IPL.1, IPL.4-IPL.13) | 10/90 |
| | (except pages IPL.3, IPL.7, IPL.9) | 03/91 |
| **Macintosh External Drives** | --Table of Contents | 10/88 |
| | --Service Notes | 06/86 |
| | (except pages 0.3, 0.7) | 08/87 |
| | (except page 0.4) | 02/87 |
| | --Take-Apart (400K) | 04/84 |
| | (except page 1.3) | 02/86 |
| | --Take-Apart 800K Drive | 10/88 |
| | (except page 2.4) | 12/88 |
| | --Illustrated Parts List | 10/88 |
| | (except page IPL.2) | 02/87 |
| | (except page IPL.3) | 08/87 |
| | (except pages IPL.4, IPL.5) | 12/88 |
| **Hard Disk 20** | --Table of Contents | 10/89 |
| | --Basics | 10/85 |
| | --Diagnostics | 09/88 |
| | (except page 2.1) | 10/89 |


*...Continued on next page*

| | | |
|---|---|---|
| **Hard Disk 20 (Continued)** | --Troubleshooting | 11/86 |
| | --Take-Apart | 10/85 |
| | --Illustrated Parts List | 03/86 |
| | (except page 5.3) | 02/86 |
| | (except pages IPL.1-IPL.2) | 02/89 |
| | (except page IPL.3) | 02/90 |
| **Apple PC 5.25 Drive** | --Table of Contents | 02/90 |
| | --Basics | 08/87 |
| | (except pages 1.1, 1.2) | 02/90 |
| | --Take-Apart | 08/87 |
| | --Diagnostics | 02/90 |
| | --Troubleshooting | 08/87 |
| | --Illustrated Parts List | 08/87 |
| **Apple FDHD/SuperDrive** | --Table of Contents | 10/89 |
| | --Basics | 05/89 |
| | (except page 1.10) | 03/91 |
| | --Take-Apart | 05/89 |
| | --Diagnostics | 05/89 |
| | --Troubleshooting | 05/89 |
| | --Illustrated Parts List | 06/89 |
| **AppleFax Modem** | --Table of Contents | 11/88 |
| | --Basics | 03/88 |
| | --Take-Apart | 03/88 |
| | --Diagnostics | 03/88 |
| | (except pages 3.1, 3.2, 3.6-3.8) | 11/88 |
| | --Troubleshooting | 03/88 |
| | (except pages 4.3-4.5) | 11/88 |
| | --Additional Procedures | 11/88 |
| | --Illustrated Parts List | 04/88 |
| **Apple Scanner** | --Table of Contents | 11/89 |
| | --Basics | 08/88 |
| | (except page 1.7) | 11/88 |
| | (except pages 1.1, 1.12-1.15) | 01/89 |
| | (except pages 1.9, 1.16) | 08/89 |
| | --Take-Apart | 08/88 |
| | (except pages 2.26, 2.27) | 02/89 |
| | (except pages 2.8, 2.28, 2.29, 2.34, 2.35) | 07/89 |
| | --Diagnostics | 11/89 |
| | (except pages 3.2-3.6, 3.9) | 03/91 |
| | --Troubleshooting | 08/88 |
| | (except page 4.3) | 10/89 |
| | (except page 4.4) | 11/89 |

| | | |
|---|---|---|
| **Apple Scanner (Continued)** | --Additional Procedures | 08/88 |
| | (except pages 5.10, 5.11) | 07/89 |
| | (except pages 5.1, 5.12, 5.13) | 10/89 |
| | --Illustrated Parts List | 08/88 |
| | (except page IPL.1) | 10/88 |
| | (except page IPL.6) | 02/89 |
| | (except page IPL.12) | 07/89 |
| | (except page IPL.13) | 10/89 |
| **StyleWriter** | --Table of Contents | 03/91 |
| | --Basics | 03/91 |
| | --Take-Apart | 03/91 |
| | --Troubleshooting | 03/91 |
| | --Illustrated Parts List | 03/91 |

Apple Technical Procedures

# Macintosh Family Cards

## Technical Procedures

## ❑ TABLE OF CONTENTS


**Section 1 – SE-Bus PC Card**

1.2 Product Description
1.2 SE-Bus PC Card and Cable Procedures
1.2 Materials Required
1.3 Install or Replace Cable
1.5 Install or Replace SE-Bus PC Card
1.8 Remove Cable
1.10 Remove SE-Bus PC Card
1.11 Troubleshooting

**Section 2 – Macintosh II Video Cards**

2.2 Product Description—Macintosh II Video Cards
2.2 Macintosh II Video Card
2.2 Macintosh II Two-Page Monochrome Video Card
2.2 Macintosh II Monochrome Video Card
2.2 Macintosh II Portrait Video Card
2.3 Macintosh II High-Resolution Display Video Card
2.3 Macintosh II Extended High-Resolution Display Video Card
2.4 Product Description—Macintosh Display Cards
2.4 Macintosh Display Card 4/8
2.4 Macintosh Display Card 8/24
2.4 Macintosh Display Card 8/24•GC
2.5 Macintosh II Video Card Upgrades
2.5 Macintosh II Video Card RAM Upgrade
2.6 Macintosh II Two-Page Monochrome Video Card RAM Upgrade
2.7 Macintosh II Portrait Video Card RAM Upgrade
2.9 Macintosh II High-Resolution Display Video Card RAM Upgrade
2.10 Macintosh Display Card Upgrade
2.10 Macintosh Display Card 4/8 Upgrade
2.12 Troubleshooting Video/Display Cards
2.12 Troubleshooting Checklist
2.12 Using Video Diagnostics

**Section 3– Apple IIe Card**

3.2 Basics
3.2 Product Description
3.2 Features
3.3 What's in the Box
3.5 Apple IIe Card Installation Procedure
3.5 Materials Required
3.5 Installation Procedure
3.6 Removal Procedure
3.7 Troubleshooting
3.7 Diagnostic Information (Not Available)
3.7 Helpful Information
3.7 Symptom/Cure Troubleshooting

**Illustrated Parts List**

IPL.3 Video Card – 12-inch B/W and 13-inch RGB (Figure 1)
IPL.5 Video Card—Macintosh II Two-Page Monochrome (Figure 2)
IPL.7 Video Card—Macintosh II Portrait Display (Figure 3)
IPL.9 Video Card—Macintosh II Monochrome, 1-Bit (Figure 4)
IPL.11 Video Card—Macintosh II High-Resolution Display (Figure 5)
IPL.11 Video Card—Macintosh II Extended High-Resolution Display (Figure 6)
IPL.13 Macintosh Display Card 4/8 (Figure 7)
IPL.13 Macintosh Display Card 8/24 (Figure 8)
IPL.15 Macintosh Display Card 8/24•GC (Figure 9)
IPL.17 Apple IIe Card (Figure 10)

©Apple Computer, Inc., 1989-1991. No portion of this document may be reproduced in any form without the written permission of Apple Computer, Inc.

MacTest, FDHD, SuperDrive, and QuickDraw are trademarks of Apple Computer, Inc.

Macintosh, AppleCAT, Apple, and the Apple logo are registered trademarks of Apple Computer, Inc.

Apple Technical Procedures

# Macintosh Family Cards

## Section 1 – SE-Bus PC Card

### ❑ CONTENTS


1.2 Product Description
1.2 SE-Bus PC Card and Cable Procedures
1.2 Materials Required
1.3 Install or Replace Cable
1.5 Install or Replace SE-Bus PC Card
1.8 Remove Cable
1.10 Remove SE-Bus PC Card
1.11 Troubleshooting


***Note:*** The SE-Bus PC Card is necessary for the Macintosh SE only.

***Note:*** If a step in this section is underlined, detailed instructions for that step can be found in Section 2, Take-Apart, of *Macintosh SE Technical Procedures.*

## ❑ PRODUCT DESCRIPTION

The Macintosh® SE-Bus PC Card (for the Macintosh SE only) is a disk drive controller for the Apple PC 5.25 Drive (sold separately). The SE-Bus PC Card and the Apple PC 5.25 Drive may be used with the *Apple File Exchange* program (sold separately) to transfer files between 3.5-inch Macintosh-formatted disks and 5.25-inch MS-DOS-formatted disks.

The SE-Bus PC Card mounts on the main logic board in the Macintosh SE. A DB-37 connector on the SE-Bus PC Card cable (provided) mounts at the back of the Macintosh SE for connection to the Apple PC 5.25 Drive.

## ❑ SE-BUS PC CARD AND CABLE PROCEDURES

Use this procedure to install the SE-Bus PC Card and cable, or to replace previously installed components. If you are installing them, install the cable first, and then install the card.

**Materials Required**

#2 Phillips screwdriver
Pliers
SE-Bus PC Card
SE-Bus PC Card assembly kit (provided):
- 2 plastic standoffs
- 1 SE-Bus PC Card cable
- 2 screws

## Install or Replace Cable

1. Remove the cover.

2. If you are installing the cable (and not replacing it), locate the expansion port cover (Figure 1, #1) on the inside of the Macintosh SE cover. Squeeze the two center mounting tabs on the expansion cover (Figure 1, #2) toward each other, and push out to remove it.

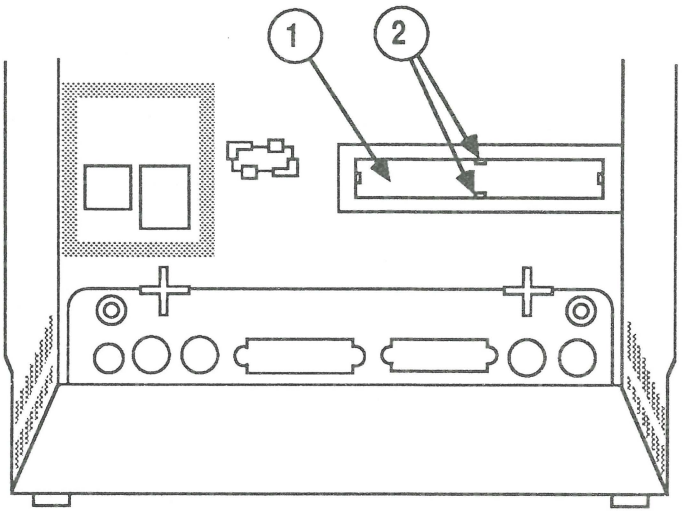


**FIGURE 1**

Return the expansion port cover to the customer when you return the Macintosh SE.

***Note:*** Advise the customer that the expansion port cover should not be replaced unless the SE-Bus PC Card is removed. If the expansion cover is replaced, the Macintosh SE must be opened and the expansion cover removed before the expansion port can be used.

3. Discharge the CRT.

4. Place the Macintosh SE face down on the grounded workbench pad and put on your grounding wriststrap. (Never put on the wriststrap until after the CRT has been discharged.)

5. Remove the main logic board.

6. Stand the Macintosh SE upright so that the back is toward you. Position the mounting plate on the SE-Bus PC Card cable so that the 37-pin connector is facing you, and pin 1 is on the right (see Figure 2; the pin numbers are on the face of the connector). Mount the plate inside the chassis with the two Phillips screws (Figure 2, #1).

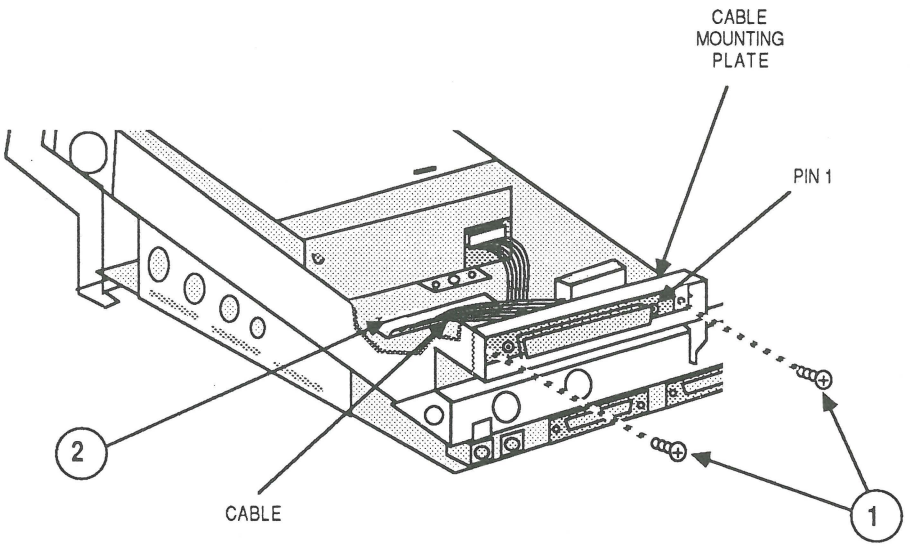


**FIGURE 2**

7. Route the 26-pin connector on the cable through the rectangular hole (Figure 2, #2) in the chassis bottom, and place the Macintosh SE face down.

8. If you are also installing the SE-Bus PC Card, skip to "Install or Replace SE-Bus PC Card," step 5.

9. Plug the cable into the 26-pin connector on the card (Figure 3, #1).

10. Replace the main logic board.

11. Replace the cover.

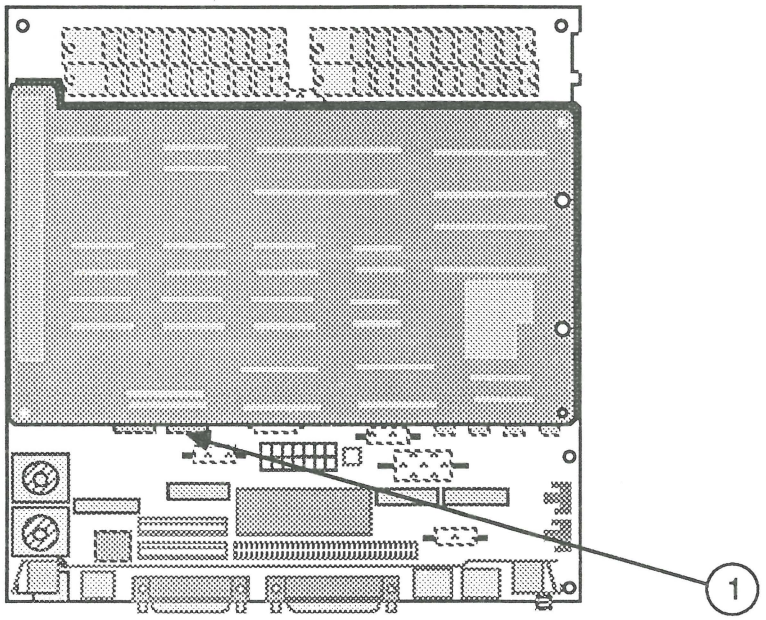


**FIGURE 3**

## Install or Replace SE-Bus PC Card

1. Remove the cover.

2. Discharge the CRT.

3. Place the Macintosh SE face down on the grounded workbench pad and put on your grounding wriststrap. (Never put on the grounding wriststrap until after the CRT has been discharged.)

4. Remove the main logic board.

5. From the component side of the card, push the two plastic standoffs into the mounting holes (Figure 4, #1) until they snap into place.

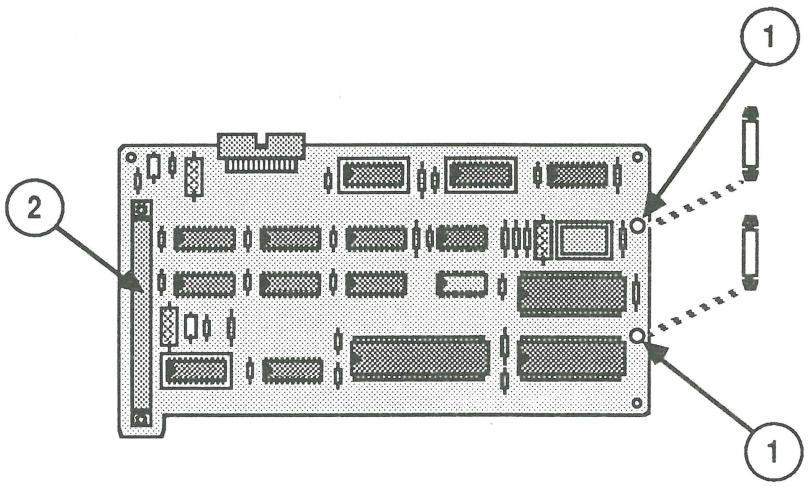


**FIGURE 4**

6. Locate the 96-pin Euro-DIN connector on the card (Figure 4, #2) and the internal expansion connector on the main logic board (Figure 5, #1). Turn the card component-side-down above the main logic board, and join the two connectors.

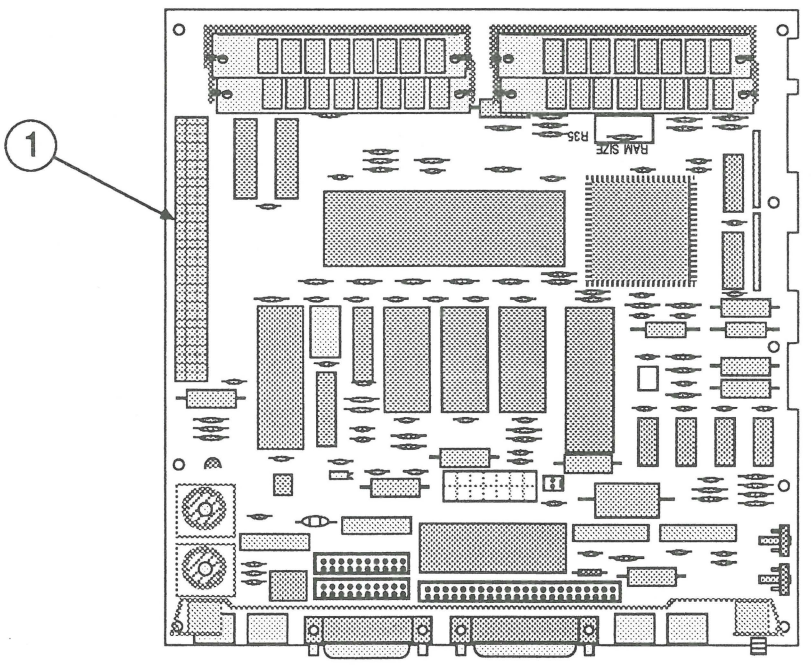


**FIGURE 5**

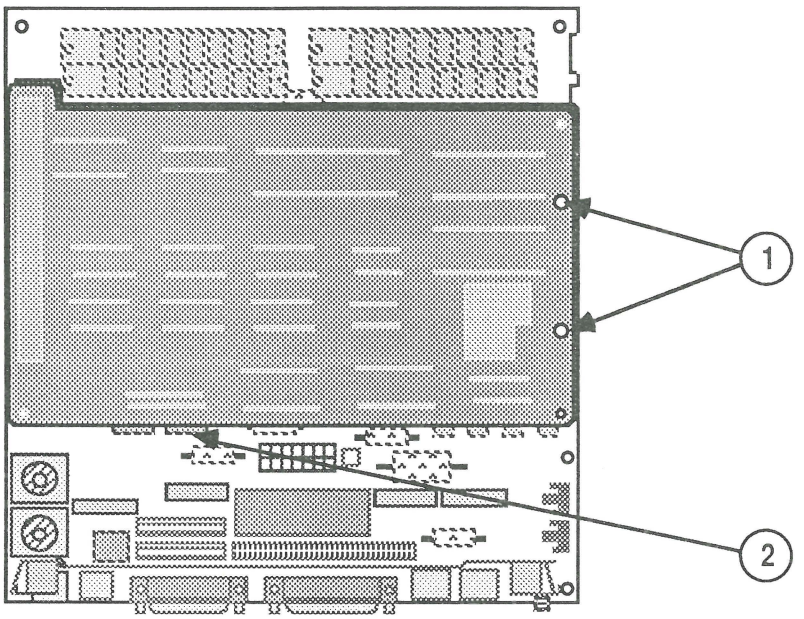


**FIGURE 6**

7. Align the plastic standoffs on the card with the mounting holes on the main logic board (Figure 6, #1). Push the standoffs into the holes until they snap into place.

8. Position the Macintosh SE with the face down and the bottom toward you. Plug the SE-Bus PC Card cable into the 26-pin connector on the card (Figure 6, #2).

9. Replace the main logic board.

10. Replace the cover.

**Remove Cable**

1. Remove the cover.
2. Discharge the CRT.
3. Place the Macintosh SE face down on the grounded workbench pad, and put on your grounding wriststrap. (Never put on the grounding wriststrap until after the CRT has been discharged.)
4. Remove the main logic board.
5. Unplug the SE-Bus PC Card cable from the 26-pin connector on the SE-Bus PC Card (Figure 7, #1).

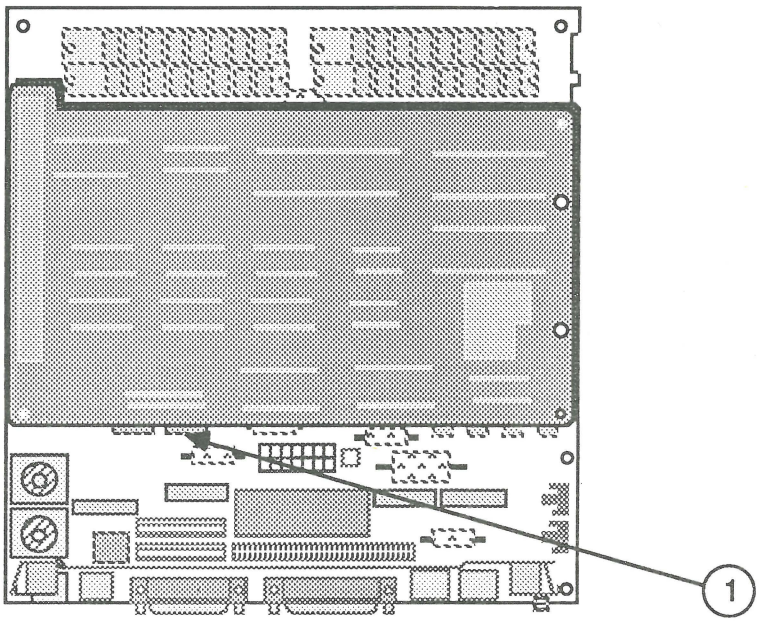


**FIGURE 7**

6. Stand the Macintosh SE upright so that the back is toward you. Remove the two Phillips screws (Figure 8, #1) that secure the cable mounting plate.

7. Pull the cable through the rectangular hole in the chassis bottom (Figure 8, #2) and out of the computer.

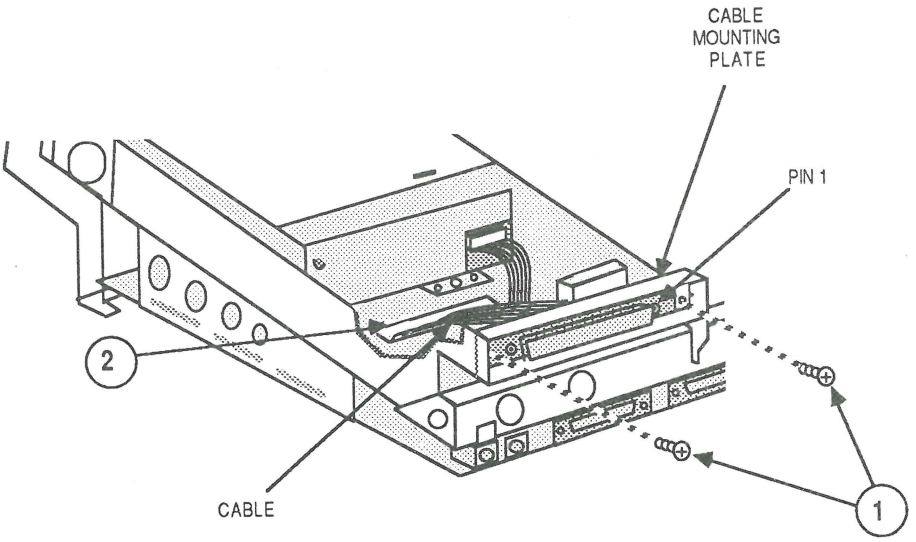


**FIGURE 8**

## Remove SE-Bus PC Card

1. Remove the cover.
2. Discharge the CRT.
3. Place the Macintosh SE face down on the grounded workbench pad and put on your grounding wriststrap. (Never put on the grounding wriststrap until after the CRT has been discharged.)
4. Remove the main logic board.
5. Unplug the SE-Bus PC Card cable from the 26-pin connector on the SE-Bus PC Card (Figure 9, #3).

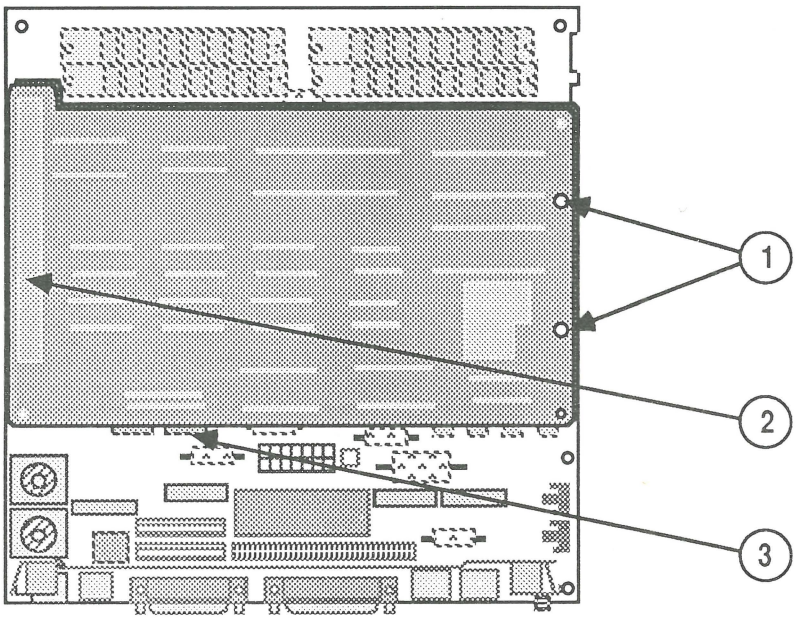


**FIGURE 9**

6. Working from the bottom side of the logic board, squeeze the plastic standoff ends (Figure 9, #1) with a pair of pliers, and push the standoffs out of the holes (Figure 10).

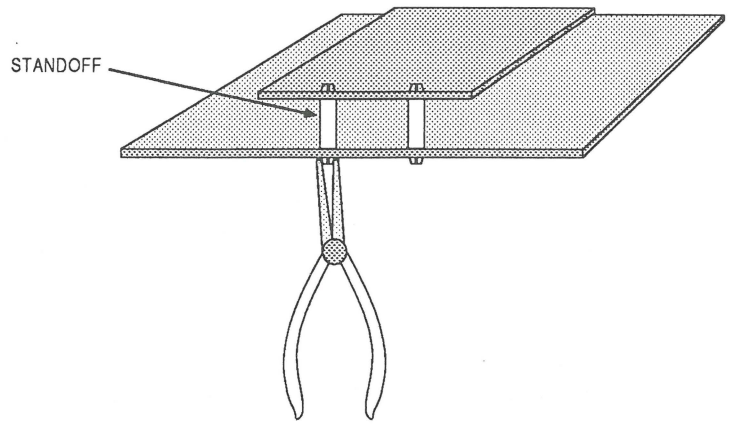


**FIGURE 10**

7. Unplug and remove the card from the 96-pin Euro-DIN connector on the main logic board (Figure 9, #2).

8. Use a pair of pliers to remove the plastic standoffs from the card (Figure 10).

## ❑ TROUBLESHOOTING

Refer to *Apple PC 5.25 Drive Technical Procedures* for troubleshooting instructions.

Apple Technical Procedures

# Macintosh Family Cards

## Section 2 – Macintosh II Video Cards

### ❑ CONTENTS


2.2 Product Description—Macintosh II Video Cards
2.2 Macintosh II Video Card
2.2 Macintosh II Two-Page Monochrome Video Card
2.2 Macintosh II Monochrome Video Card
2.2 Macintosh II Portrait Video Card
2.3 Macintosh II High-Resolution Display Video Card
2.3 Macintosh II Extended High-Resolution Display Video Card
2.4 Product Description—Macintosh Display Cards
2.4 Macintosh Display Card 4/8
2.4 Macintosh Display Card 8/24
2.4 Macintosh Display Card 8/24•GC
2.5 Macintosh II Video Card Upgrades
2.5 Macintosh II Video Card RAM Upgrade
2.6 Macintosh II Two-Page Monochrome Video Card RAM Upgrade
2.7 Macintosh II Portrait Video Card RAM Upgrade
2.9 Macintosh II High-Resolution Display Video Card RAM Upgrade
2.10 Macintosh Display Card Upgrade
2.10 Macintosh Display Card 4/8 Upgrade
2.12 Troubleshooting Video/Display Cards
2.12 Troubleshooting Checklist
2.12 Using Video Diagnostics


***Note:*** If a step is underlined, detailed instructions for that step can be found in Section 2, Take-Apart, of *Macintosh II/IIx/IIfx Technical Procedures*, *Macintosh IIcx Technical Procedures,* or *Macintosh IIci Technical Procedures.*

## ❑ PRODUCT DESCRIPTION—MACINTOSH II VIDEO CARDS

The Macintosh II video display is controlled by a video interface card installed in one of the NuBus expansion slots in the Macintosh II, Macintosh IIx, Macintosh IIcx, Macintosh IIci, or Macintosh IIfx. Video interface cards provide monochrome or color display capabilities. The following video cards are compatible with the Macintosh II, the Macintosh IIx, the Macintosh IIcx, the Macintosh IIci, and the Macintosh IIfx:

**Macintosh II Video Card**

The Macintosh II Video Card is a high-performance color graphics card used with both the Apple High-Resolution Monochrome Monitor and the AppleColor High-Resolution RGB Monitor. The Macintosh II Video Card provides 640-by-480 resolution in black-and-white or color.

**Macintosh II Two-Page Monochrome Video Card**

The Macintosh II Two-Page Monochrome Video Card is a high-performance black-and-white video card used with the Apple Two-Page Monochrome Monitor. The Macintosh II Two-Page Monochrome Video Card features 1152-by-870 resolution.

**Macintosh II Monochrome Video Card**

The Macintosh II Monochrome Video Card is an economical, high-quality video card used with the Apple High-Resolution Monochrome Monitor. The Macintosh II Monochrome Video Card provides 640-by-480 resolution and supports a 1-bit-per-pixel, black-and-white display.

**Macintosh II Portrait Video Card**

The Macintosh II Portrait Video Card is a high-performance video card designed for use with the Macintosh II Portrait Display. The Macintosh II Portrait Video Card provides 640-by-870 resolution and features a 2-bit-per-pixel (gray scale) display capability.

**Macintosh II High-Resolution Display Video Card**

The Macintosh II High-Resolution Display Video Card is a high-performance video card for the Apple High-Resolution Monochrome and AppleColor High-Resolution RGB monitors. This card has 256K of socketed video RAM, and provides 640-by-480 resolution in black-and-white and color. Installing the Video Card Expansion Kit increases the video RAM to 512K.

**Macintosh II Extended High-Resolution Display Video Card**

The Macintosh II Extended High-Resolution Video Card is a high-performance video card for the Apple High-Resolution Monochrome and AppleColor High-Resolution RGB monitors. This card comes with 512K of video RAM soldered to the board and features 640-by-480 resolution in black-and-white or color.

## ❑ PRODUCT DESCRIPTION – MACINTOSH DISPLAY CARDS

The following display cards are compatible with the Macintosh II, the Macintosh IIx, the Macintosh IIcx, the Macintosh IIci, and the Macintosh IIfx:

**Macintosh Display Card 4/8**

The Macintosh Display Card 4/8 is a high-performance 8-bit video card that supports all Macintosh II monitors. This card provides 16 gray levels on the Apple Two-Page Monochrome Monitor and the Macintosh II Portrait Display, 256 gray levels on the Apple High-Resolution Monochrome Monitor, and 256 colors on the AppleColor High-Resolution RGB. The Macintosh Display Card 4/8 features RS-170 standard timing that provides flicker-free imaging and compatibility with interlace video equipment. This card comes with 512K of socketed video RAM. Installing the Macintosh Display Card VRAM Kit upgrades the card to 24-bit performance with 1 MB of video RAM.

**Macintosh Display Card 8/24**

The Macintosh Display Card 8/24 is a high-performance 24-bit video card that supports all Macintosh II monitors. This card provides 256 shades of gray on the Apple High-Resolution Monochrome Monitor, the Apple Two-Page Monochrome Monitor, and the Macintosh II Portrait Display. The 24-bit color supports a 16.7-million true-color scale on the AppleColor High-Resolution RGB Monitor. The Macintosh Display Card 8/24 features RS-170 standard timing that provides flicker-free imaging and compatibility with interlace video equipment. This card comes with 1 MB of video RAM soldered to the board.

**Macintosh Display Card 8/24•GC**

The Macintosh Display Card 8/24•GC is a high-performance 24-bit video card that supports all Macintosh II monitors and provides more power and increased speed to graphics-intensive applications. This card provides 256 shades of gray on the Macintosh II monochrome monitors and the 24-bit color supports a 16.7 million true-color scale on the AppleColor High-Resolution RGB Monitor. The card comes with 2 MB of soldered video RAM and contains a 30-MHz AMD 29000 processor running an optimized version of 32-bit Quick-Draw™. To improve performance of applications, 2 MB of dynamic RAM can be installed using the Macintosh Display Card DRAM Expansion Kit.

## ❑ MACINTOSH II VIDEO CARD UPGRADES

**Materials Required**

*MacTest™ II/IIx, MacTest IIfx,* or *MacTest IIcx/IIci;* and/or *AppleCAT™ II/IIx* or *AppleCAT IIcx/IIci*
Grounded workbench and wriststrap
Video Card Expansion Kit (8 RAM chips)
Any one of the following Macintosh II video cards:
- Macintosh II Video Card
- Macintosh II Two-Page Monochrome Video Card
- Macintosh II Portrait Video Card
- Macintosh II High-Resolution Video Card

***CAUTION:*** *CMOS chips are very susceptible to ESD damage. To prevent ESD damage, follow the precautions outlined for ESD prevention in* ***You Oughta Know****.*

**Macintosh II Video Card RAM Upgrade**

The Macintosh II Video Card comes with a 4-bit-per-pixel display capability and provides up to 16 colors or shades of gray simultaneously. By installing the Video Card Expansion Kit (8 RAM chips), the same card is upgraded to 8 bits per pixel and can display up to 256 colors or shades of gray simultaneously.

1. Install the eight video RAM chips in the appropriate locations on the video card: B1, C1, D1, E1, G1, H1, G2, and H2 (Figure 1, #1).

   ***Note:*** The notch at the end of each RAM chip should face the DB-15 connector on the rear of the card.

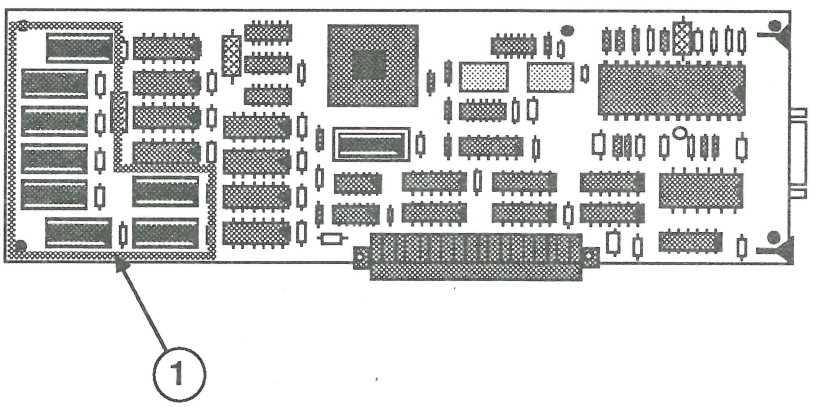


**FIGURE 1**

2. Reinstall the video card, and connect the monitor.

3. Insert the *MacTest (II/IIx, IIfx,* or *IIcx/IIci)* disk and switch on the system. Open the Control Panel, select the monitor control, and set the shade selection to 256.

4. Open the Test Selections menu, select the video card test, and run *MacTest (II/IIx, IIfx,* or *IIcx/IIci)* to verify the function of the video RAM upgrade.

5. If there are no problems with the video RAM upgrade, *MacTest (II/IIx, IIfx,* or *IIcx/IIci)* displays the message **All selected tests have passed.** If the video card test fails, refer to "Troubleshooting Video/Display Cards" at the end of this section.

### Macintosh II Two-Page Monochrome Video Card RAM Upgrade

The Macintosh II Two-Page Monochrome Video Card comes with 256K of video RAM installed and can display 2 bits per pixel or up to 4 shades of gray. By installing the Video Card Expansion Kit (8 RAM chips), the same card is upgraded to 4 bits per pixel and can display up to 16 shades of gray.

1. Install the eight video RAM chips in the appropriate locations on the video card: D1 through D8 (Figure 2, #1).

   ***Note:*** The notch at the end of each RAM chip should face the expansion slot connector (Figure 2, #2) on the bottom of the card.

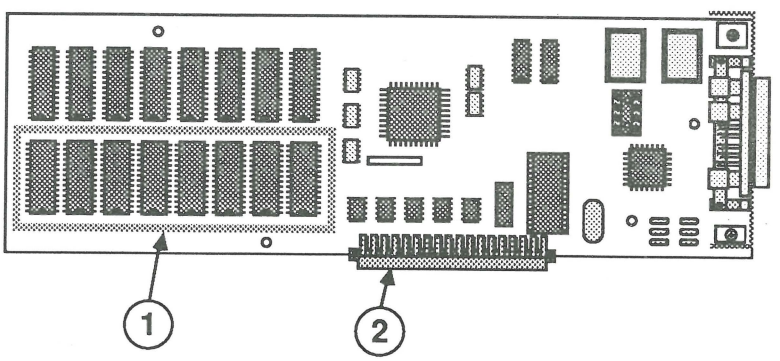


**FIGURE 2**

2. Reinstall the video card, and connect the monitor.

3. Insert the *MacTest (II/IIx, IIfx,* or *IIcx/IIci)* disk and switch on the system. Open the Control Panel and click on the monitor icon.

4. In the area called **Characteristics of Selected Monitor**, select **Black & White/Grays**; in the box called **Grays**, select the number **16**. Close the Control Panel.

5. Open the Test Selections menu, select the video card test, and run *MacTest (II/IIx, IIfx,* or *IIcx/IIci)* to verify the function of the video RAM upgrade.

6. If there are no problems with the video RAM upgrade, *MacTest (II/IIx, IIfx,* or *IIcx/IIci)* displays the message **All selected tests have passed**. If the video card test fails, refer to "Troubleshooting Video/Display Cards" at the end of this section.

## Macintosh II Portrait Video Card RAM Upgrade

The Macintosh II Portrait Video Card comes with 256K of video RAM installed and features a 2-bit-per-pixel display capability that allows up to 4 shades of gray to be displayed. With the addition of the Video Card Expansion Kit (8 RAM chips), this card is upgraded to 4 bits per pixel and can display up to 16 shades of gray.

1. Install the eight video RAM chips in the appropriate locations on the video card: D1 through D8 (Figure 3, #1).

   ***Note:*** The notch at the end of each RAM chip should face the expansion slot connector (Figure 3, #2) on the bottom of the card.

2. Reinstall the video card, and connect the monitor.

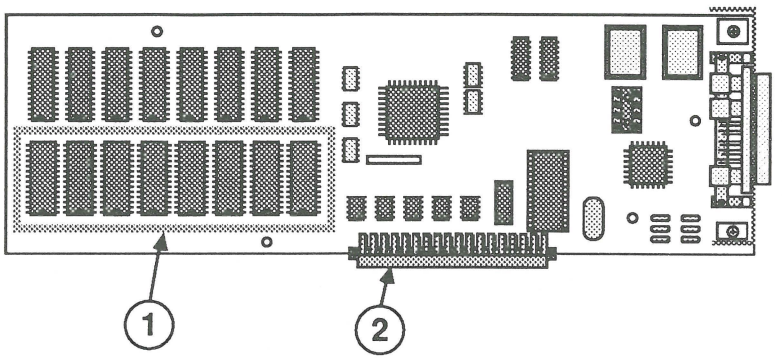


**FIGURE 3**

3. Insert the *MacTest (II/IIx, IIfx,* or *IIcx/IIci)* disk and switch on the system. Open the Control Panel and click on the monitors icon.

4. In the area called **Characteristics of Selected Monitor**, select **Black & White/Grays**; in the box called **Grays**, select the number **16**. Close the Control Panel.

5. Open the Test Selections menu, select the video card test, and run *MacTest (II/IIx, IIfx,* or *IIcx/IIci)* to verify the function of the video RAM upgrade.

6. If there are no problems with the video RAM upgrade, *MacTest (II/IIx, IIfx,* or *IIcx/IIci)* displays the message **All selected tests have passed**. If the video card test fails, refer to "Troubleshooting Video/Display Cards" at the end of this section.

## Macintosh II High-Resolution Display Video Card RAM Upgrade

The Macintosh II High-Resolution Video Card comes with 256K of socketed video RAM and can display up to 16 colors or shades of gray. By installing the Video Card Expansion Kit (eight RAM chips), the 4-bit, socketed video card is upgraded to 8 bits, and can display up to 256 colors or shades of gray.

1. Install the eight video RAM chips in the appropriate locations on the video card: C1 through C8 (Figure 4, #1).

   ***Note:*** The notch at the end of each RAM chip should face the expansion slot connector (Figure 4, #2) on the bottom of the card.

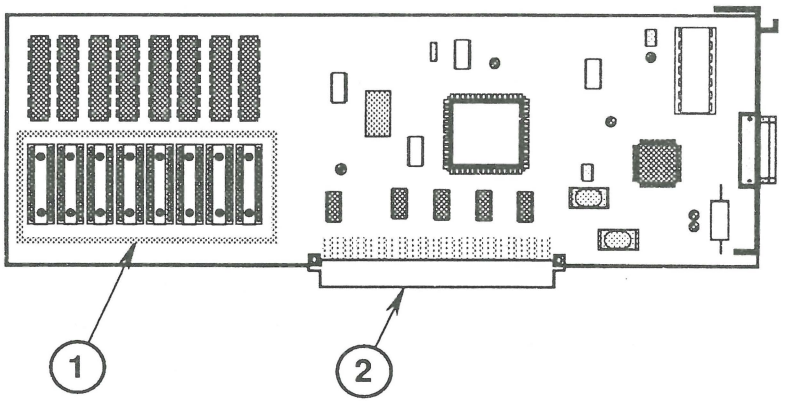


**FIGURE 4**

2. Reinstall the video card, and connect the monitor.

3. Insert the *MacTest (II/IIx, IIfx,* or *IIcx/IIci)* disk and swich on the system. Open the Control Panel and click on the monitors icon.

4. In the area called **Characteristics of Selected Monitor**, select **Black & White/Grays**; in the box called **Grays**, select the number **256**. Close the Control Panel.

5. Open the Test Selections menu, select the video card test, and run *MacTest (II/IIx, IIfx,* or *IIcx/IIci)* to verify the function of the video RAM upgrade.

## ❑ MACINTOSH DISPLAY CARD UPGRADE

**Materals Required**

Grounded workbench and wriststrap
VRAM Expansion Kit (two VRAM SIMMs)
Macintosh Display Card 4/8

**Macintosh Display Card 4/8 Upgrade**

The Macintosh Display Card 4/8 is an 8-bit video card with 512K of video RAM that supports all Macintosh II monitors. Installing the VRAM Expansion Kit upgrades the Macintosh Display 4/8 to 24-bit performance with 1 MB of video RAM. This upgrade expands monitor support to 16.7 million true-color scale on the AppleColor High-Resolution RGB Monitor and 256 gray levels on the Apple High-Resolution Monochrome Monitor, Apple Two-Page Monochrome Monitor, and Macintosh II Portrait Display.

***Note:*** Before installing the VRAM SIMMs, make sure each SIMM has the word "VRAM" or "Video" imprinted on the component side.

1. Install the two VRAM SIMMs in the socket locations on the video card (Figure 5, #1).

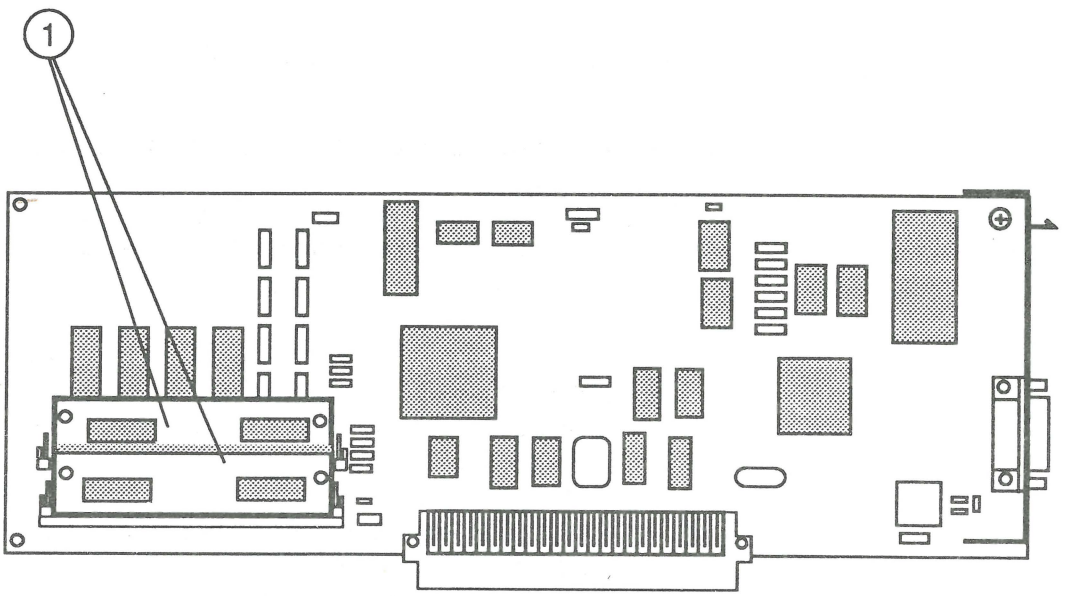


**FIGURE 5**

2. Reinstall the display card, and connect the monitor.

3. Switch on the system and examine the screen for display problems (such as a totally dark or fragmented screen).

   - If there are no screen display problems, go on to step 4.

   - If there are screen display problems, refer to "Troubleshooting Video/Display Cards" at the end of this section.

4. Open the Control Panel and select the monitors icon. In the area called **Characteristics of Selected Monitor**, confirm that the correct monitor configuration has been selected. For example, if an Apple Two-Page Monochrome Monochome Monitor is connected to the system, the shade selection should be set to **Black & White/Grays** and you should be able to select up to 256 gray levels. If an AppleColor High-Resolution RGB Monitor is connected, the shade selection should be set to **Colors** and you should be able to select up to 16.7 million colors.

   - If the Control Panel displays the correct monitor configuration, the upgrade is complete.

   - If the correct monitor configuration is not displayed when you open the Control Panel, refer to "Troubleshooting Video/Display Cards" at the end of this section.

## ❑ TROUBLESHOOTING VIDEO/DISPLAY CARDS

Most video card failures are quickly and easily solved by checking connections, running diagnostic tests (where applicable), and exchanging the defective video card or defective video or dynamic RAM (if socketed).

### Troubleshooting Checklist

If a video card is not functioning correctly, a number of video symptoms may occur, such as a totally dark screen or a bright screen with no recognizable video display. To troubleshoot a video card, perform the following corrective actions in the order listed:

1. Card may not be properly seated; try reseating.
2. Socketed video or dynamic RAM may not be properly seated on the video card; try reseating.
3. Check the video cable connections.
4. Run video diagnostic tests (see below).
5. Replace video or dynamic RAM (if socketed) with known-good RAM.
6. Replace video card.

### Using Video Diagnostics

Diagnostic tests that you can use to troubleshoot a malfunctioning video card are:

- *AppleCAT (II/IIx* or *IIcx/IIci)* and/or *MacTest (II/IIx, IIfx,* or *IIcx/IIci)* – For Macintosh II Video Card, Macintosh II Two-Page Monochrome Video Card, Macintosh II Portrait Video Card, and Macintosh II High-Resolution Video Card.

- *MacTest IIfx* – For Macintosh Display Card 4/8, Macintosh Display Card 8/24, and Macintosh Display Card 8/24•GC.

*MacTest (II/IIx, IIfx,* or *IIcx/IIci)* verifies the proper functioning of the video card. *AppleCAT (II/IIx* or *IIcx/IIci)* checks for defective video or dynamic RAM on the video card and tests the video DAC (digital-to-analog convertor).

***Note:*** For information on setting up and running *MacTest (II/IIx, IIfx,* or *IIcx/IIci)* or *AppleCAT (II/IIx* or *IIcx/IIci)*, refer to Section 3, Diagnostics, of *Macintosh II/IIx/IIfx Technical Procedures, Macintosh IIcx Technical Procedures,* or *Macintosh IIci Technical Procedures.*

Apple Technical Procedures

# Macintosh Family Cards

## Section 3 – Apple IIe Card

## ❑ CONTENTS


3.2 Basics
3.2 Product Description
3.2 Features
3.3 What's in the Box
3.5 Apple IIe Card Installation Procedure
3.5 Materials Required
3.5 Installation Procedure
3.6 Removal Procedure
3.7 Troubleshooting
3.7 Diagnostic Information (Not Available)
3.7 Helpful Information
3.7 Symptom/Cure Troubleshooting


***Note:*** The Apple IIe Card is compatible with the Macintosh LC only.

***Note:*** If a step in this section is underlined, detailed instructions for that step can be found in Section 2, Take-Apart, of *Macintosh LC Technical Procedures.*

## ❑ BASICS

### Product Description

The Apple IIe Card for the Macintosh LC provides compatibility with most Apple IIe and Apple IIc software. This low-cost option card enables Macintosh LC owners to run Apple II software as this software would look and run on an Apple IIe or Apple IIc. (The Apple IIe Card does not support Apple IIGS software.)

To hold down cost, the Apple IIe Card uses hardware resources built into the Macintosh LC and includes on the card only those components necessary to run Apple II software at speeds comparable to an Apple IIe or IIc. The Apple IIe card includes a 65C02 microprocessor, 256K of soldered DRAM, an IWM chip, gameport circuitry and Gemini gate array, and a high-density MultiPort connector. All Apple II code is run on the card. The Macintosh LC provides all keyboard, video, and serial port connections.

The Apple IIe Card is installed in the 96-pin processor-direct slot on the Macintosh LC logic board. Although similar to the processor-direct slot in the Macintosh SE, the Apple IIe Card works only in the Macintosh LC direct slot.

### Features

The Apple IIe Card includes these features:

- Runs 98% of the Apple IIe and Apple IIc software
- Provides performance comparable to an Apple IIe or Apple IIc
- Supports the Macintosh LC internal FDHD™/SuperDrive™ for non-copy-protected Apple II software
- Provides standard Apple II sound
- Supports standard Apple IIe video modes on the monitor connected to the Macintosh LC
- Has a simulated slot architecture that enables the user to configure seven pseudo slots with I/O devices (see "Simulated Slot Architecture" below)

- Includes an on-card IWM disk controller chip to support external Apple II drives (UniDisk 3.5 and Apple 5.25 drives only) and joystick port products for copy-protected Apple II software

- Accomodates up to three disk drives daisy-chained from the Apple IIe Card. (Only one of the three drives can be a UniDisk 3.5 drive, and this 3.5-inch drive must be the first drive connected to the Y-cable; the other two drives must be Apple 5.25 drives.)

  ***Note:*** The Apple IIe Card does not support the UniDisk 5.25, Duodisk, or Disk IIc drives.

### *Simulated Slot Architecture*

The Apple IIe Card includes code that enables the user to "install" pseudo I/O devices in up to seven slots. To install a device, launch the Apple IIe application and simultaneously type **<Option>** **<⌘>** **<Esc>** to enter the Option Panel.

The following devices or functions can be assigned to the seven available slots:

- Serial ports (slots 1 or 2; enables printing to an Imagewriter or through AppleTalk to a LaserWriter)
- RAM Disk Memory Card or third-party RAM card (slots 1 or 2)
- 80-column video card (slot 3)
- ProDOS clock, or Apple IIe or IIc mouse (slot 4)
- Internal FDHD/SuperDrive disk drive (slot 5)
- External UniDisk 3.5 or Apple 5.25 drives (slot 6)

### What's in the Box

The following items are included in the Apple IIe Card package:

- Apple IIe Card
- Y-cable with external disk drive and joystick connectors
- Apple IIe application software
- *Apple IIe Card User's Guide*

For additional information regarding the Apple IIe Card, software installation, and setup, refer to the *Apple IIe Card User's Guide.*

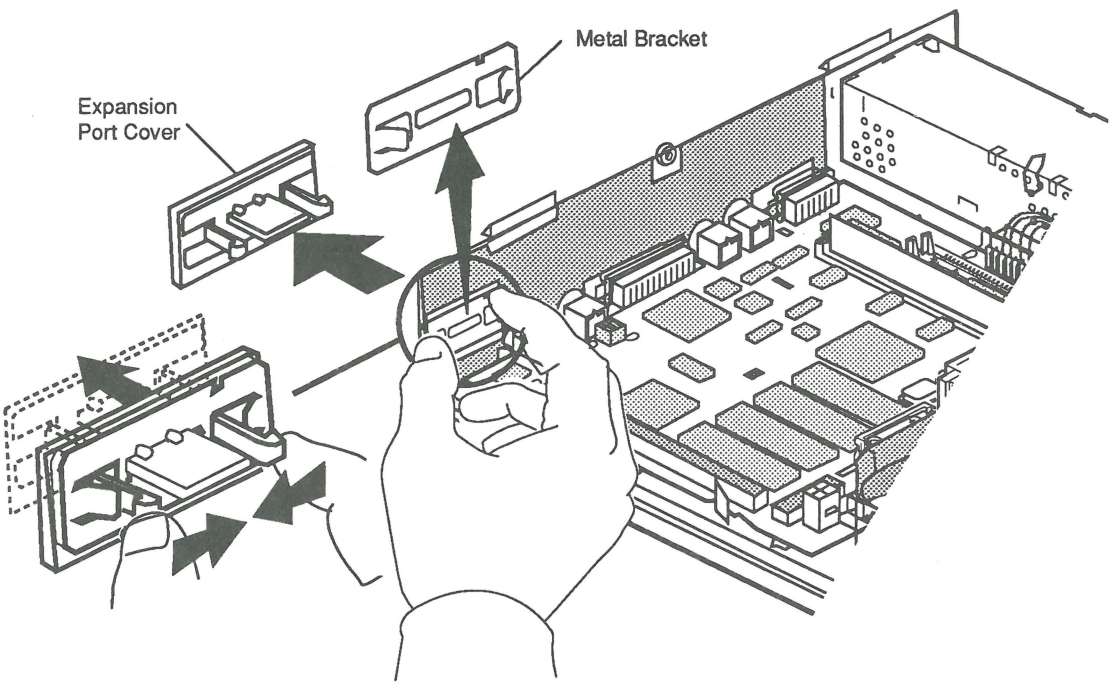


**Figure 1-1 Removing the Expansion Port Cover**

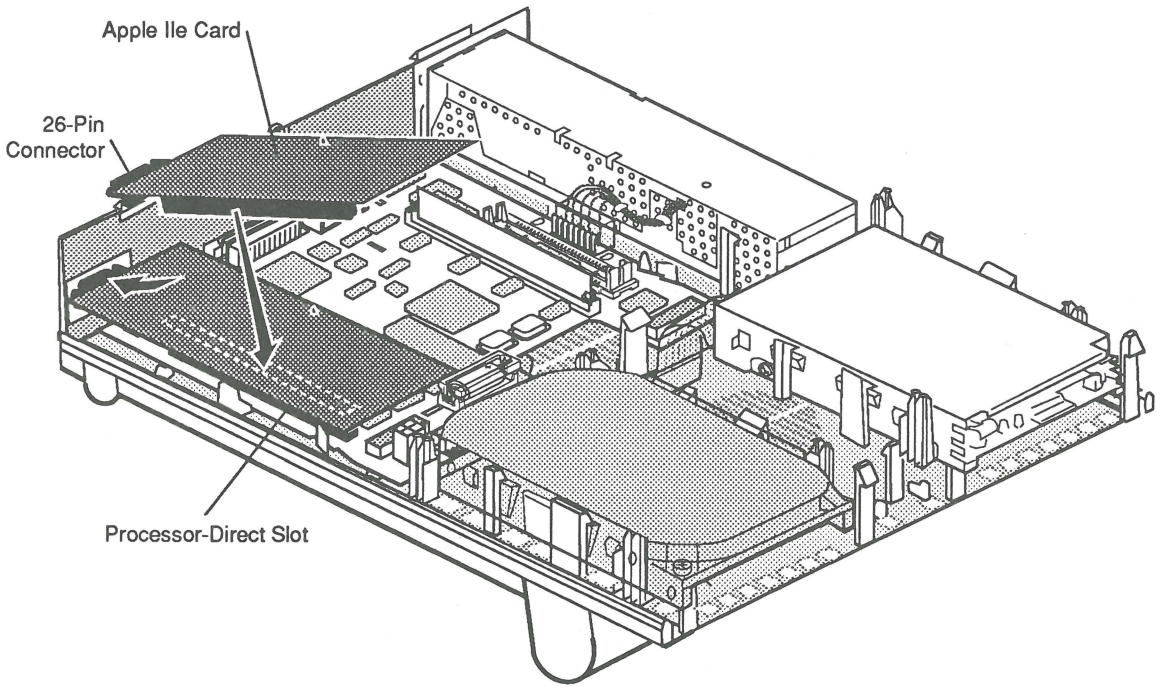


**Figure 1-2 Installing the Apple IIe Card**

## ❑ APPLE IIe CARD INSTALLATION PROCEDURE

Use this procedure to install or replace the Apple IIe Card.

**Materials Required**

#2 Phillips screwdriver
Apple IIe Card assembly kit (includes Apple IIe Card with a plastic standoff and a Y-cable)

**Installation Procedure**

1. Remove the top case.

2. Place the Macintosh LC on the grounded workbench pad and put on your grounding wriststrap.

3. **Figure 1-1.** If necessary, remove the expansion port cover from the bottom case of the Macintosh LC. Squeeze together the two plastic mounting tabs on the expansion port cover, and push the cover out. Remove the metal bracket.

   Return the expansion port cover to the customer when you return the Macintosh LC.

4. Remove the fan/speaker assembly.

5. Spread the two plastic tabs at each side of the logic board and slide the logic board about 1/2 inch toward the front of the computer.

6. **Figure 1-2.** Turn the card component-side-down. Align the 96-pin connector on the card with the processor-direct slot on the main logic board, and join the two connectors.

7. Slide the logic board back into place, making sure that the 26-pin connector on the end of the card slides into the expansion port opening.

8. Replace the fan/speaker assembly.

9. Replace the top case.

***CAUTION:*** *If you plan to attach an external UniDisk 3.5 or Apple 5.25 drive, be sure to switch off system power before connecting the Y-cable to the external connector on the Apple IIe Card or connecting devices to the Y-cable.*

## Removal Procedure

1. Remove the top case.
2. Place the Macintosh LC on the grounded workbench pad and put on your grounding wriststrap.
3. If necessary, unplug the Y-cable from the 26-pin connector on the card.
4. Remove fan/speaker assembly.
5. Spread the two plastic tabs at each side of the logic board and slide the logic board about 1/2 inch toward the front of the computer.

***CAUTION:*** *When you install the Apple IIe card on the logic board, the external connector on the Apple IIe card may touch capacitors on the logic board. When disconnecting the Apple IIe card from the logic board, be careful not to damage any components.*

6. Disconnect and remove the card from the 96-pin processor-direct slot on the main logic board by pulling firmly straight up on the card.
7. Slide the logic board back into its correct place.
8. If necessary, replace the expansion port cover on the bottom case of the Macintosh LC.
9. Replace the fan/speaker assembly and the top case.

## ❑ TROUBLESHOOTING

### Diagnostic Information

The diagnostic for testing the Apple IIe Card is currently not available.

### Helpful Information

1. Follow all electrostatic discharge (ESD) precautions when working on the Macintosh LC. Refer to the *You Oughta Know* tab in the *Apple Service Technical Procedures* for additional information.

2. Perform the following quick checks:
   - Check the power source and power connection.
   - Check all cables and cable connections.
   - Check the adjustment of all user controls.
   - Check that no more than one system file is on the startup device/disk.
   - Check that the computer system and the system software are compatible. Verify that the customer is using System 6.0.7 or higher.
   - Open the computer and verify that all circuit boards, fuses, and chips are secure, clean, and undamaged.

3. Isolate the problem to the Apple IIe Card, an attached peripheral, or the CPU. Disconnect any external devices from the system and from the Apple IIe card and rerun the application. If OK, install one device at a time until you have installed and tested all devices.

4. For additional troubleshooting information, refer to the Symptom/Cure Troubleshooting section that follows. If you suspect a problem with the system, refer to Section 4, Troubleshooting, in the *Macintosh LC Technical Procedures.*

### Symptom/Cure Troubleshooting

To use the symptom/cure chart that follows, first find the symptom that most nearly describes the problem; then perform the first corrective action on the solution list. If that corrective action does not fix the problem, go to the next action. If you replace a module and find that the problem remains, reinstall the original module before you go to the next action.

If the symptoms displayed by the Macintosh LC are not listed below, try replacing the Apple IIe Card.

| Problems | Solutions |
|---|---|
| • *Application runs too fast or too slowly* | 1. Change speed setting in Apple IIe Option Panel.<br>2. Reinstall Apple IIe Card software.<br>3. Replace Apple IIe Card. |
| • *No sound when running application with sound* | 1. Check whether LC emits startup beep when launching Apple IIe application. If not, Refer to section 4, Troubleshooting, in *Macintosh LC Technical Procedures.*<br>2. Replace Apple IIe Card. |
| • *Video is out of adjustment* | 1. Adjust monitor connected to Macintosh LC.<br>2. Replace Apple IIe Card.<br>3. Refer to troubleshooting for appropriate monitor in *Macintosh Family Technical Procedures.* |
| • *Macintosh video works, but Apple IIe video doesn't* | 1. Replace Apple IIe Card.<br>2. Reinstall Apple IIe Card software. |
| • *Adapter card is set to color, but video is black and white when running color application* | 1. Check that monitor is set to color in Macintosh Control Panel.<br>2. Check that color is selected in Apple IIe Option Panel. |
| • *5.25-Inch drive will read but not write* | 1. If drive is beige, it is a UniDisk drive; replace drive with an Apple 5.25-inch drive (platinum colored).<br>2. Replace Y-cable.<br>3. Replace Apple IIe Card.<br>4. Refer to troubleshooting for appropriate disk drive in *Apple Service Technical Procedures.* |
| • *Disk drive doesn't read or write* | 1. Replace Y-cable.<br>2. Replace Apple IIe Card.<br>3. Refer to troubleshooting for appropriate disk drive in *Apple Service Technical Procedures.* |
| • *Joystick or paddle doesn't work* | 1. Use a joystick or paddle with 9-pin connector.<br>2. Replace Y-cable.<br>3. Replace Apple IIe Card. |

Apple Technical Procedures

# Macintosh Family Cards

## Illustrated Parts List

## ❑ CONTENTS


IPL.3 Video Card—12-inch B/W and 13-inch RGB (Figure 1)
IPL.5 Video Card—Macintosh II Two-Page Monochrome (Figure 2)
IPL.7 Video Card—Macintosh II Portrait Display (Figure 3)
IPL.9 Video Card—Macintosh II Monochrome, 1-Bit (Figure 4)
IPL.11 Video Card—Macintosh II High-Resolution Display (Figure 5)
IPL.11 Video Card—Macintosh II Extended High-Resolution Display (Figure 6)
IPL.13 Macintosh Display Card 4/8 (Figure 7)
IPL.13 Macintosh Display Card 8/24 (Figure 8)
IPL.15 Macintosh Display Card 8/24•GC (Figure 9)
IPL.17 Apple IIe Card (Figure 10)


The figures and lists in this section include all of the Macintosh Family CPU Video Cards that can be purchased from Apple, along with their part numbers. Refer to your *Apple Service Programs* manual for prices.

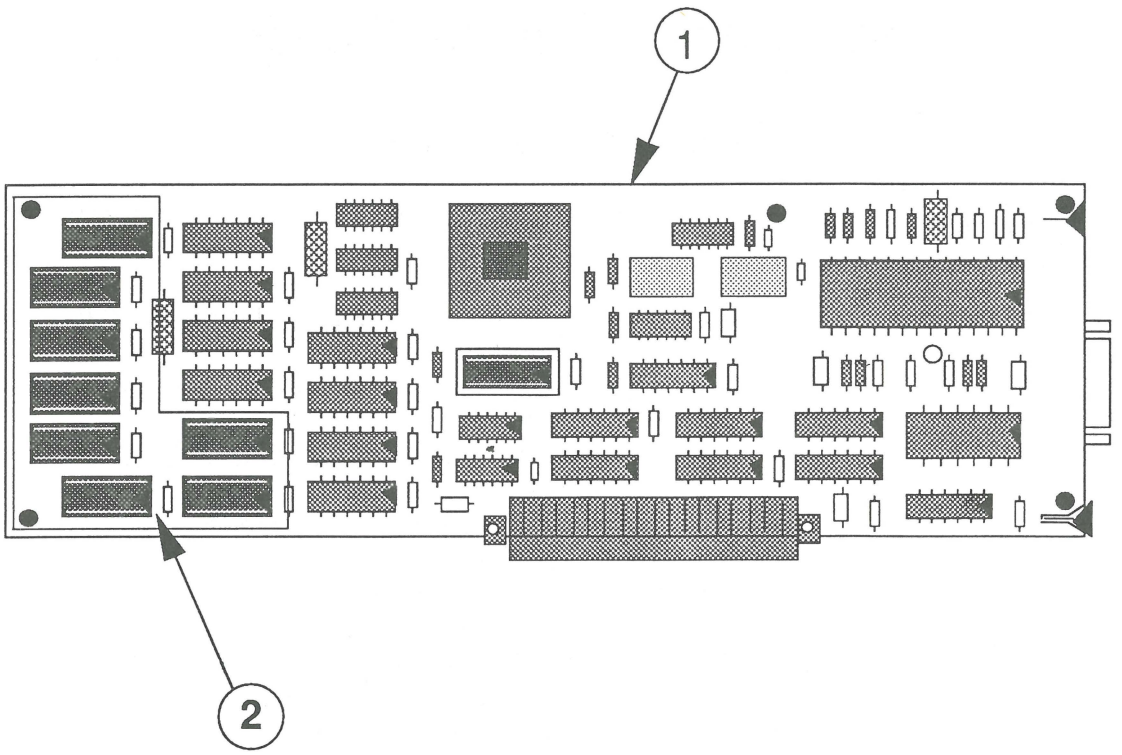


**FIGURE 1**

## ❑ VIDEO CARD—12-INCH B/W and 13-INCH RGB (Figure 1)

| Item | Part No. | Description |
|---|---|---|
| 1 | 661-0376 | Macintosh II Video Card, 4-Bit |
| | 661-0492 | Macintosh II Video Card, 8-Bit Kit (4-Bit Card and RAM Kit included) |
| 2 | 334-0024 | Video RAM IC, 150 ns |

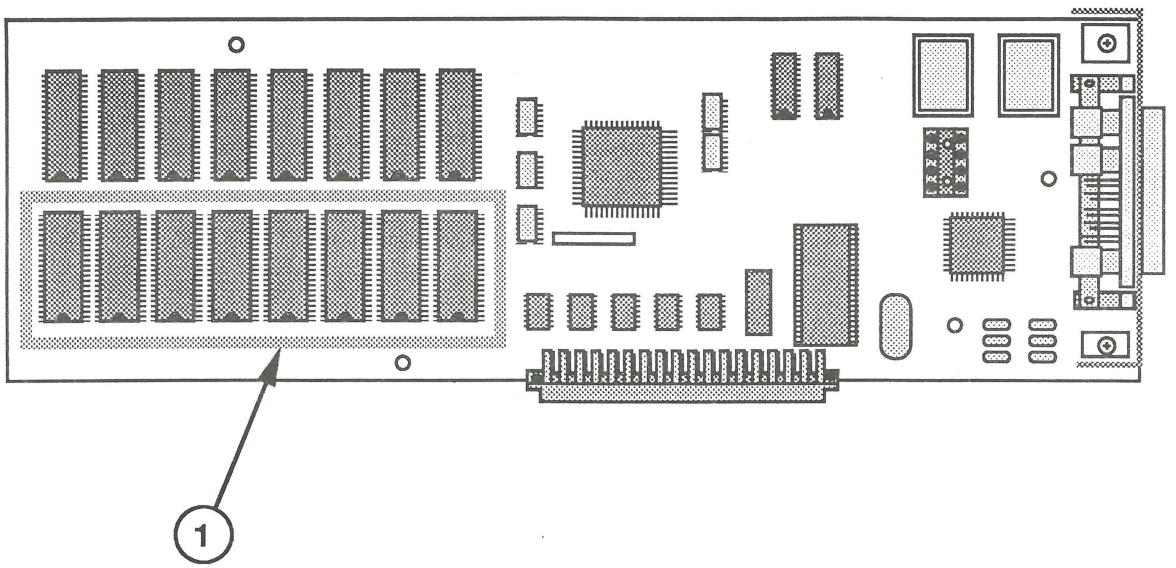


**FIGURE 2**

## ❑ VIDEO CARD—MACINTOSH II TWO-PAGE MONOCHROME (Figure 2)

| Item | Part No. | Description |
|---|---|---|
| – | 661-0456 | Macintosh II Two-Page Monochrome Video Card |
| 1 | 334-0024 | Video RAM IC, 150 ns |

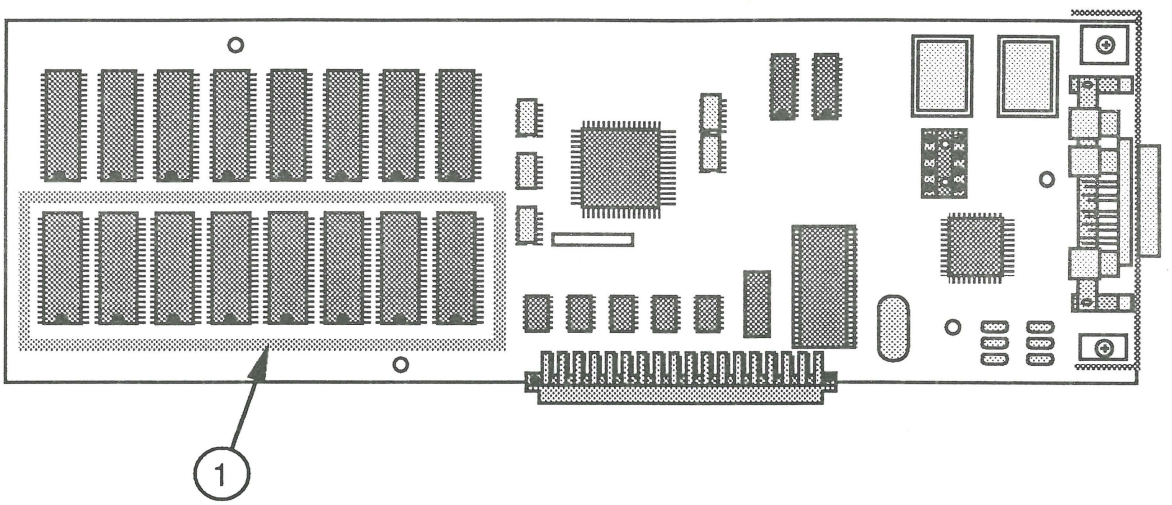


**FIGURE 3**

## ❑ VIDEO CARD—MACINTOSH II PORTRAIT DISPLAY (Figure 3)

| Item | Part No. | Description |
|---|---|---|
| – | 661-0586 | Macintosh II Portrait Display Video Card, DB-15 |
| – | 661-0587 | Macintosh II Portrait Display Video Card and DB-15 to DB-25 Cable |
| 1 | 334-0024 | Video RAM IC, 150 ns |

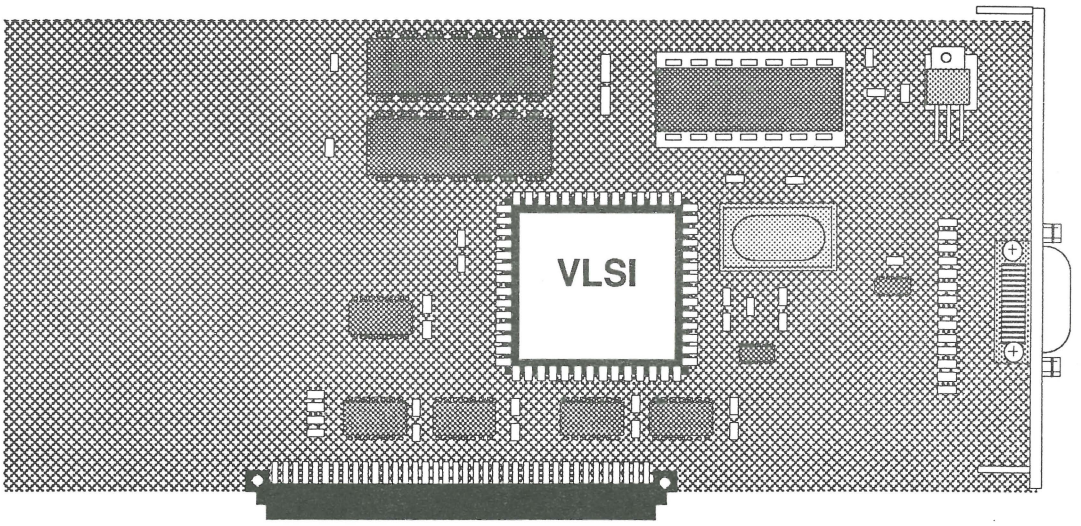


**FIGURE 4**

## ❑VIDEO CARD—MACINTOSH II MONOCHROME, 1-BIT (Figure 4)

| Item | Part No. | Description |
|---|---|---|
| – | 661-0518 | Macintosh II Monochrome Video Card, 1-Bit |

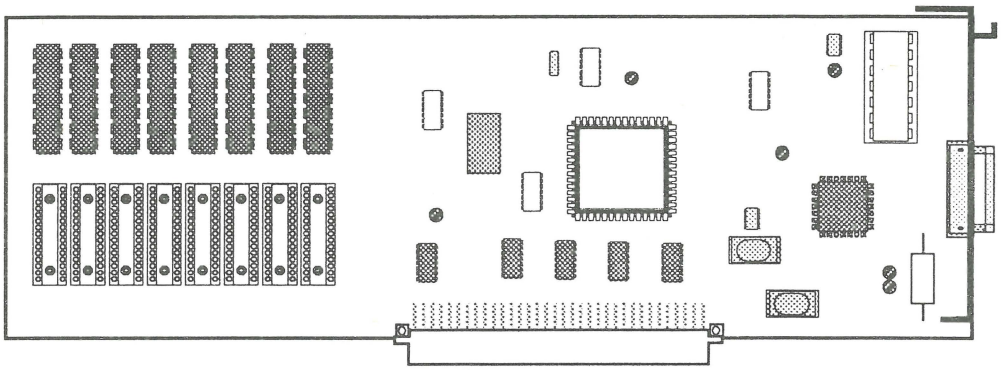

**FIGURE 5**

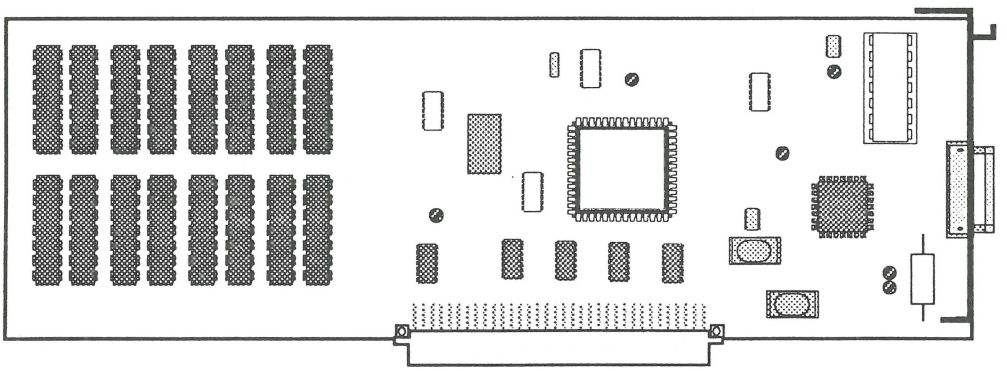

**FIGURE 6**

## ❑VIDEO CARD—MACINTOSH II HIGH-RESOLUTION DISPLAY (Figure 5)

| Item | Part No. | Description |
|---|---|---|
| – | 661-0493 | Macintosh II High-Resolution Display Video Card, 4-Bit |

## ❑VIDEO CARD—MACINTOSH II EXTENDED HIGH-RESOLUTION DISPLAY (Figure 6)

| Item | Part No. | Description |
|---|---|---|
| – | 661-0533 | Macintosh II Extended High-Resolution Display Video Card, 8-Bit |

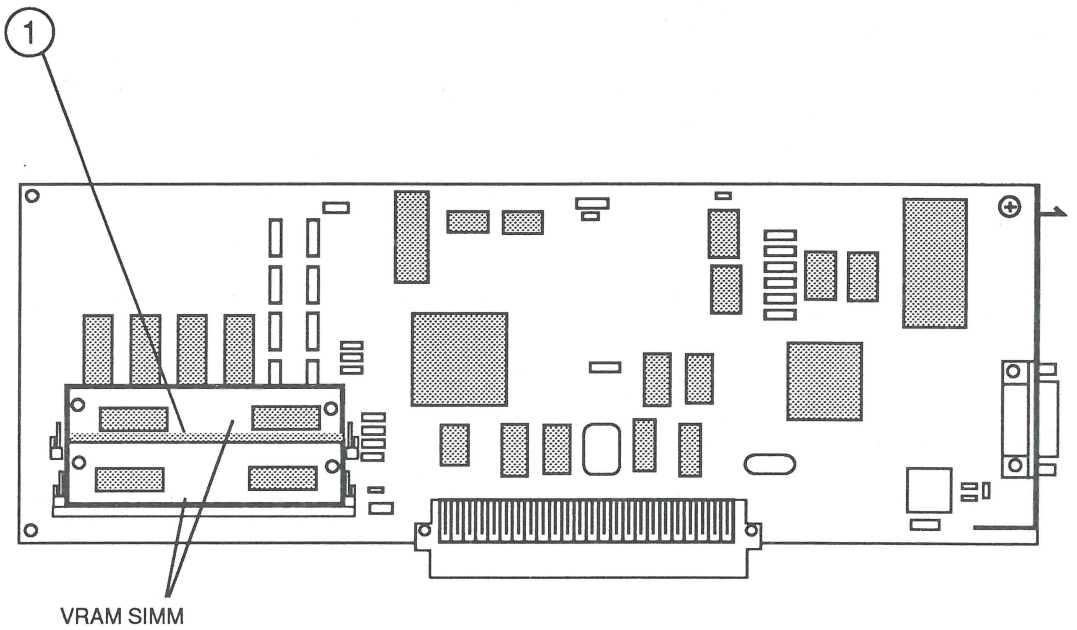


**FIGURE 7**

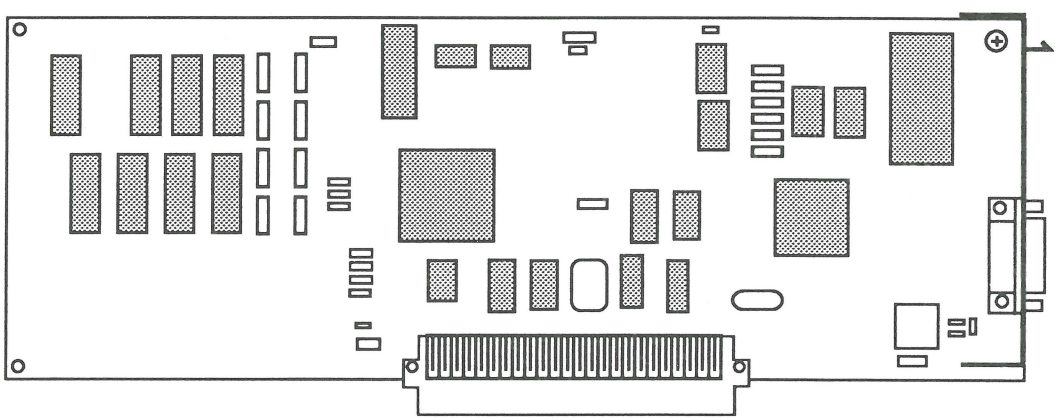

**FIGURE 8**

## ❑ MACINTOSH DISPLAY CARD 4/8 (Figure 7)

| Item | Part No. | Description |
|---|---|---|
| – | 661-0607 | Display Card, Macintosh II, 4/8 |
| 1 | 661-0609 | VRAM SIMM, 256K, 100 ns (Macintosh Display Card 4/8) |

## ❑ MACINTOSH DISPLAY CARD 8/24 (Figure 8)

| Item | Part No. | Description |
|---|---|---|
| – | 661-0608 | Display Card, Macintosh II, 8/24 |

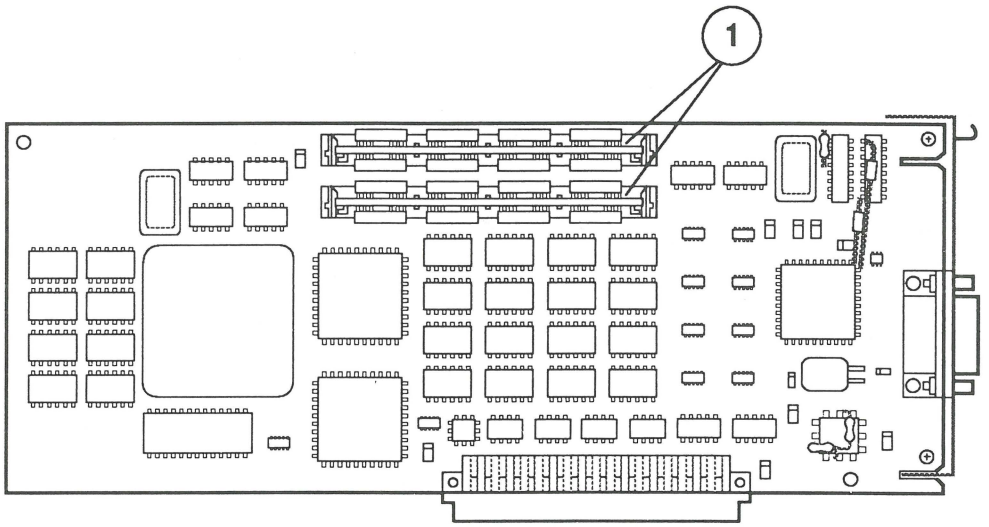


**FIGURE 9**

## ❑ MACINTOSH DISPLAY CARD 8/24•GC (Figure 9)

| Item | Part No. | Description |
|---|---|---|
| – | 661-0606 | Display Card, Macintosh II, 8/24•GC |
| 1 | 661-0610 | DRAM SIMM 1 MB, 100 ns |

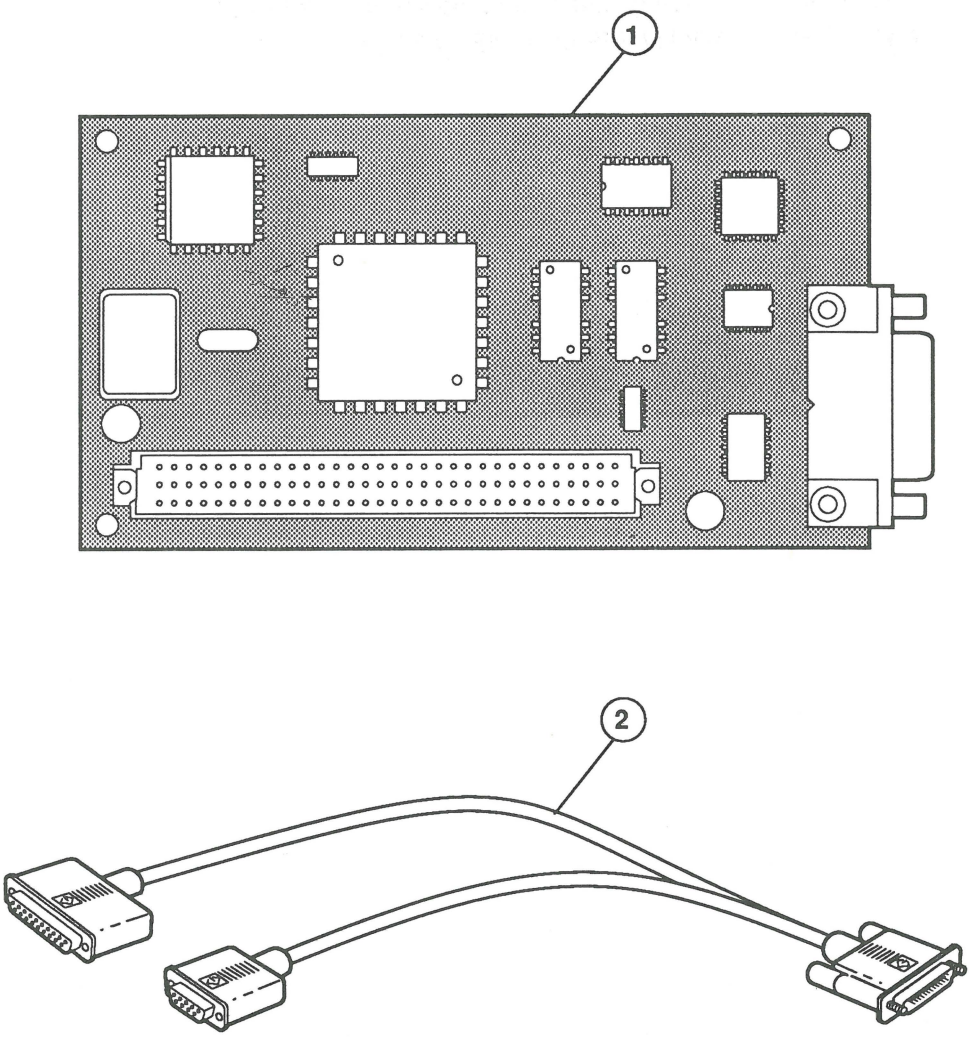


**Figure 10**

## ❑ APPLE IIe CARD (Figure 10)

| Item | Part No. | Description |
|---|---|---|
| 1 | 661-0606 | Apple IIe Card |
| 2 | 661-0610 | Y-Cable |

Apple Technical Procedures

# Macintosh ADB Input Devices

## Technical Procedures

## ❑ TABLE OF CONTENTS


| | | |
|---|---|---|
| **Section 1 – Keyboard Take-Apart** | 1.2 | Keyboard Take-Apart |
| | 1.2 | Exchanging the Keyboard |
| | 1.2 | Removing the Keyboard Mechanism |
| | 1.3 | Replacing the Keyboard Mechanism |
| | 1.5 | Extended Keyboard II Take-Apart |
| | 1.5 | Materials Required |
| | 1.5 | Disassembly |
| | 1.8 | Reassembly |
| **Illustrated Parts List** | IPL.3 | Keyboard (Figure 1) |
| | IPL.5 | Keyboard II (Figure 2) |
| | IPL.7 | Extended Keyboard (Figure 3) |
| | IPL.9 | Extended Keyboard II (Figure 4) |
| | IPL.11 | ISO Keyboard (Figure 5) |
| | IPL.13 | Mouse (Figure 6) |

Apple Technical Procedures

# Macintosh ADB Input Devices

## Section 1 – Keyboard Take-Apart

### ❑ CONTENTS


1.2 Keyboard Take-Apart
1.2 Exchanging the Keyboard
1.2 Removing the Keyboard Mechanism
1.3 Replacing the Keyboard Mechanism
1.5 Extended Keyboard II Take-Apart
1.5 Materials Required
1.5 Disassembly
1.8 Reassembly

## ❑ KEYBOARD TAKE-APART

### Exchanging the Keyboard

Some Macintosh ADB keyboards are exchanged as whole units and should not be taken apart. Keyboards in this category are the Apple Keyboard II and the Apple ISO Keyboard.

If you are exchanging the keyboard, **do not** remove the keyboard mechanism. Return the entire keyboard to Apple for exchange (**without** the cable).

Remove the keyboard mechanism **only** when the keyboard is not one of the models mentioned above, and you must replace a keyswitch.

### Materials Required

Grounded workbench pad and wriststrap
Medium Phillips screwdriver

### Removing the Keyboard Mechanism

1. Disconnect the keyboard from the CPU and mouse.
2. Remove the keyboard cable.
3. Place the keyboard on the grounded workbench pad and put on your grounding wriststrap.
4. For the Apple Keyboard, remove the three Phillips screws from the back of the keyboard (**Figure 1-1**), turn the keyboard face-up, and lift off the top plastic cover.

   For the Extended Keyboard, remove the four Phillips screws from the back of the keyboard (**Figure 1-2**).

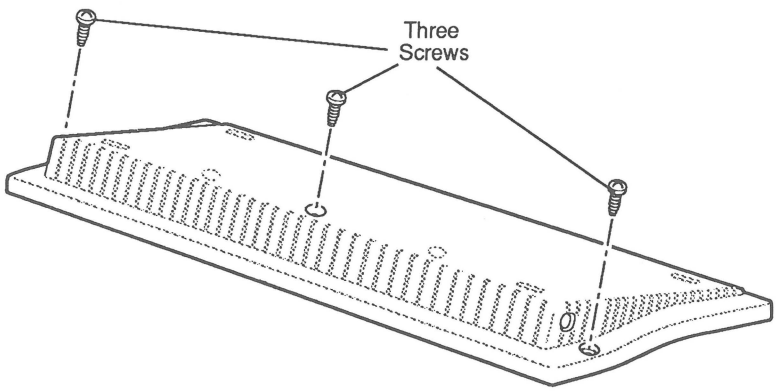


**Figure 1-1 Apple Keyboard**

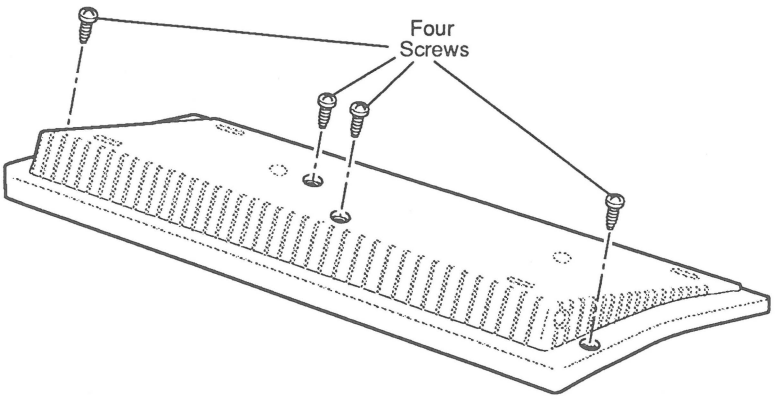


**Figure 1-2 Extended Keyboard**

5. Before you remove the keyboard mechanism, notice how the breakaway boards (with Apple Desktop Bus connectors) fit into the bottom case (**Figure 1-3**).

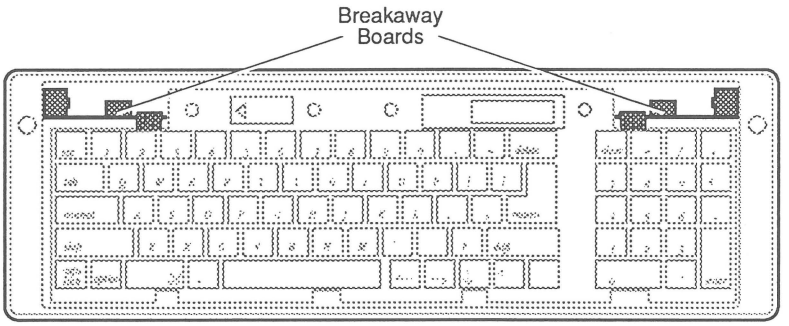


**Figure 1-3 Keyboard Breakaway Boards**

6. Lift the keyboard mechanism out of the bottom case.

7. To remove and replace keyswitches, see the "Keyswitch Replacement" procedures under the *You Oughta Know* tab.

## Replacing the Keyboard Mechanism

1. Place the keyboard mechanism in the bottom case. As you do so, check that the black metal teeth of the keyboard mechanism are in the plastic slots of the bottom case. Slip the small breakaway boards into place vertically (**Figure 1-3**).

2. Engage the teeth of the top cover onto the front edge of the bottom cover, and fit the top cover guideposts into the holes on the bottom cover.

3. Hold the cover in place, turn the keyboard face-down, and install the case screws.

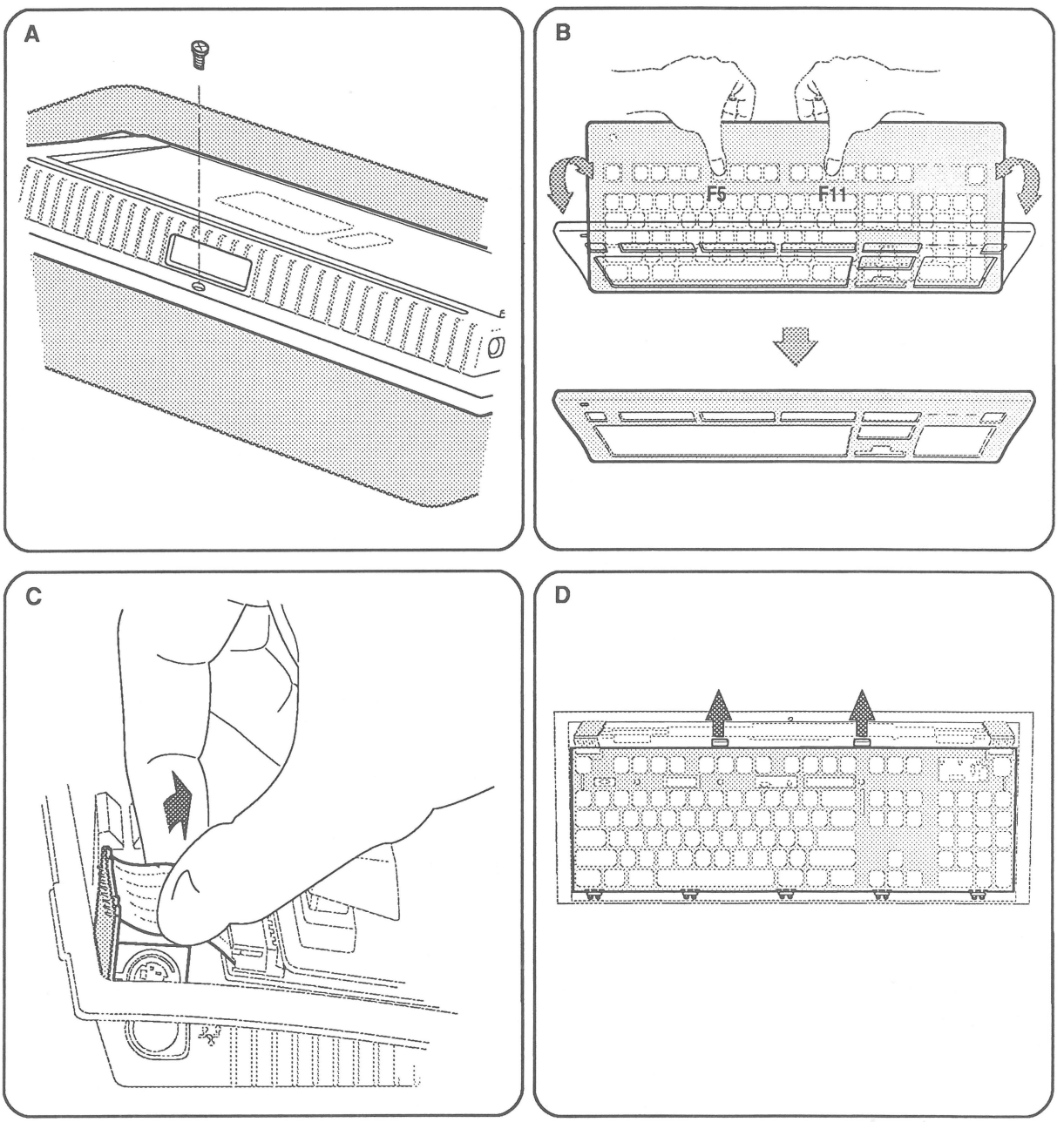


**Figure 1-4 Extended Keyboard II Disassembly**

## ❑ EXTENDED KEYBOARD II TAKE-APART

**Materials Required**

#1 Phillips screwdriver
Grounded workstation pad
Grounding wriststrap

**Disassembly**

1. Disconnect any cables connected to the keyboard, press the rear-foot height adjustment lever toward the numeric pad to retract the rear foot, and place the keyboard face-down on the grounded workstation pad.

2. To remove the top cover

   a) **Figure 1-4A**. Remove the Phillips screw located in the center of the bottom cover of the keyboard, near the height adjustment lever.

   b) Place the keyboard face-down on the pad.

   c) **Figure 1-4B**. Place your hands as shown in the figure. Simultaneously pull the rear edge of the keyboard cover up and away from the case bottom until the cover snaps loose. Pivot the rear of the cover toward the front of the keyboard until the cover detaches from the case bottom.

3. To remove the keyboard assembly

   a) **Figure 1-4C**. Lift the two ADB connectors from their slots at the upper-right and upper-left corners of the bottom case.

   b) **Figure 1-4D**. Simultaneously 1) press back on the two plastic latches holding the keyboard and 2) lift the metal plate of the keyboard until the keyboard clears the two latches. Pull the keyboard toward the back of the bottom case until it separates from the front foot.

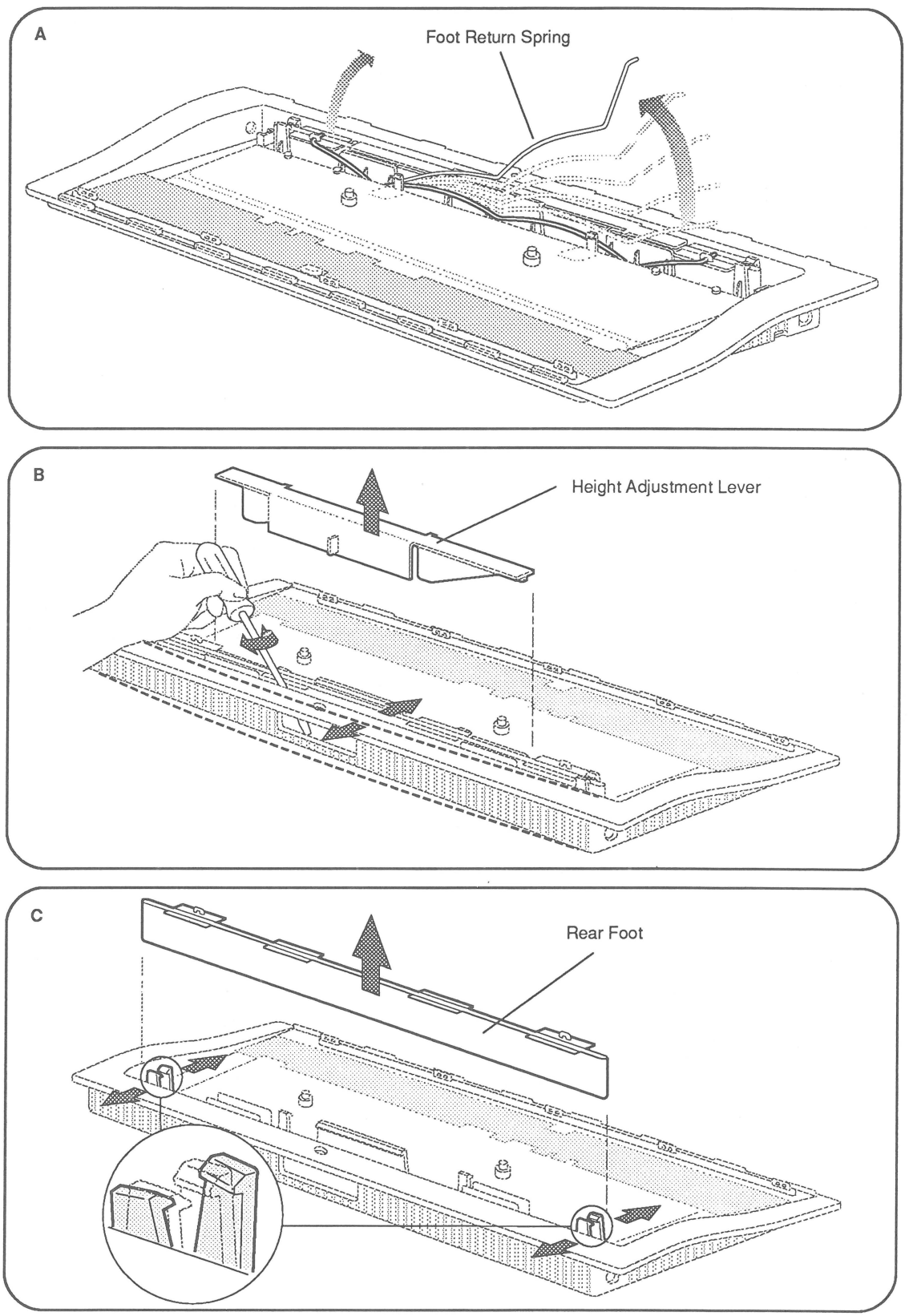


**Figure 1-5 Adjustable Rear Foot and Foot Return Spring**

4. To remove the adjustable rear foot and foot return spring

   a) **Figure 1-5A**. Slide the spring out from the two clips at both sides of the rear foot.

   b) **Figure 1-5B**. Simultaneously spread the plastic clips as shown and pull the height adjustment lever up and out.

   c) **Figure 1-5C**. Simultaneously spread the plastic clips as shown and pull out the rear foot.

## Reassembly

To reassemble the keyboard, use the following instructions.

### *Adjustable Rear Foot and Foot Return Spring*

To replace the adjustable rear foot and foot return spring

1. Slide the rear foot into the channel across the rear of the bottom case. The foot should be between the two clips at the sides and the two guides located a third of the way from each side. Push the foot down until the foot is past the three latches.
2. Replace the height adjustment lever.
3. Place one end of the foot return spring into the opening at either end of the rear foot.
4. Lower the raised end of the spring downward and across the rear foot.
5. Place the other end of the foot return spring into the opening at the other end of the foot.

### *Keyboard Assembly*

To replace the keyboard assembly

1. Place the four tabs at the front edge of the keyboard into their respective holders in the bottom case.
2. Press down on the left- and right-rear corners of the keyboard until the two plastic latches secure the metal plate to the bottom case.
3. Place the two ADB connectors into their slots.

### *Top Cover*

To replace the top cover

1. Place the front edge of the keyboard cover against the front of the bottom case. Pivot the rear of the top cover down onto the bottom case and press down until the cover is fully seated.
2. Replace the Phillips screw on the rear of the keyboard.

Apple Technical Procedures

# Macintosh ADB Input Devices

## Illustrated Parts List

## ❑ CONTENTS


IPL.3 Keyboard (Figure 1)
IPL.5 Keyboard II (Figure 2)
IPL.7 Extended Keyboard (Figure 3)
IPL.9 Extended Keyboard II (Figure 4)
IPL.11 ISO Keyboard (Figure 5)
IPL.13 Mouse (Figure 6)


The figures and lists in this section include all ADB input devices for the Macintosh SE, SE/30, II, IIx, IIcx, IIci, IIfx, IIsi, Classic, and LC computers, along with their part numbers. These are the only parts available from Apple. Refer to your *Apple Service Programs* manual for prices.

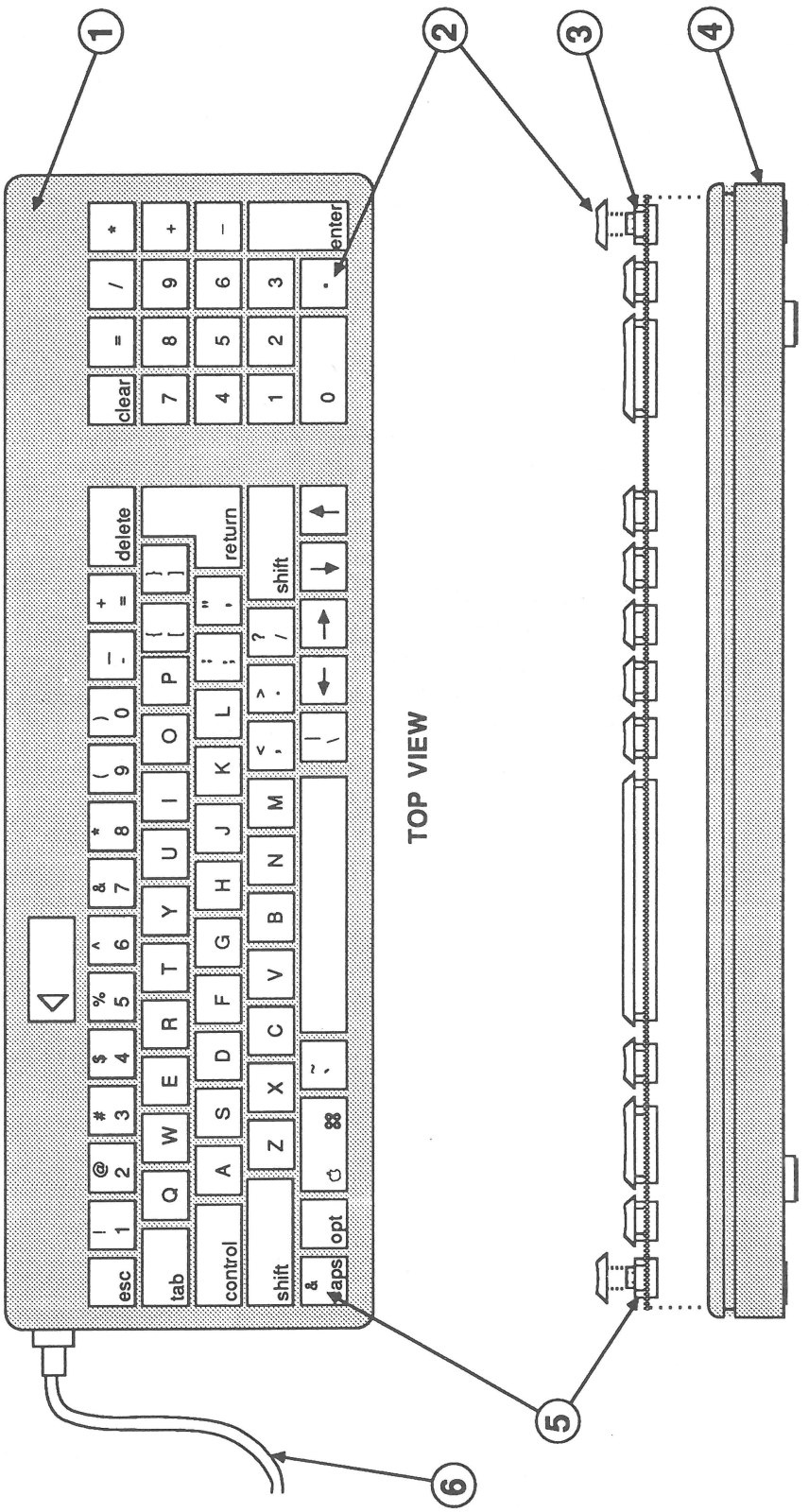
1
2
3
4
5
6
TOP VIEW
FRONT VIEW
esc
tab
control
shift
caps
opt
clear
delete
return
shift
enter

FIGURE 1

## ❑ KEYBOARD (Figure 1)

| Item | Part No. | Description |
|---|---|---|
| – | 661-0383 | Apple Keyboard |
| | C661-0383 | Apple Keyboard, French Canadian |
| | E661-0383 | Apple Keyboard, Spanish |
| 1 | 815-1016 | Top Case |
| 2 | 658-7011 | Key Cap Set |
| 3 | 076-0209 | Keyswitch Set, ADB Kybd, Tan Plunger (Set of 10) |
| | 076-0387 | Keyswitch Set, ADB Kybd, White Plunger (Set of 10) |
| | 076-0075 | Keyswitch Set, ADB Kybd, Orange Plunger (Set of 10) |
| 4 | 815-1017 | Bottom Case |
| 5 | 970-1263 | Alps Locking Keyswitch |
| 6 | 590-0361 | Keyboard Cable, 1 meter |
| | 590-0152 | Keyboard Cable, 2 meter |

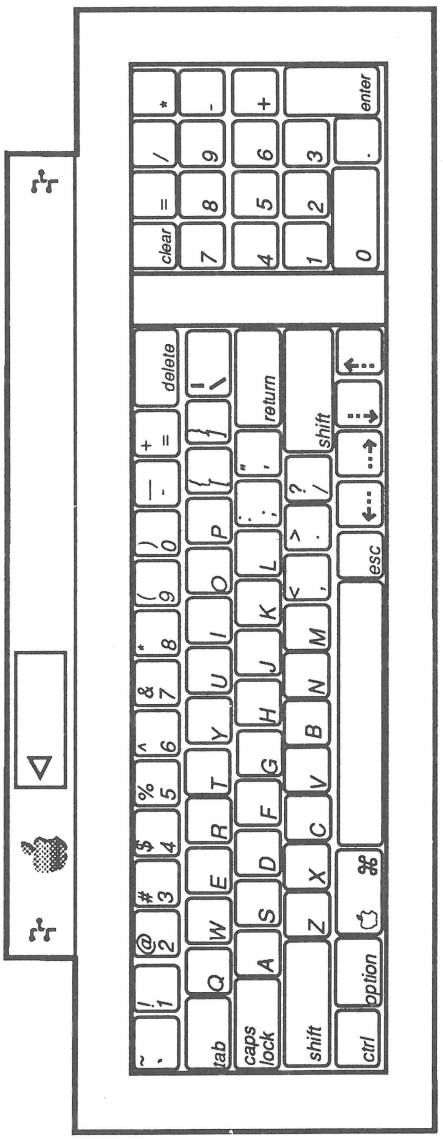
tab
caps lock
shift
ctrl
option
delete
return
shift
esc
clear
enter

FIGURE 2

## ❑ KEYBOARD II (Figure 2)

| Item | Part No. | Description |
|---|---|---|
| | 661-0603 | Apple Keyboard II, U.S. |
| | C661-0603 | Apple Keyboard II, French Canadian |
| | E661-0603 | Apple Keyboard II, Western Spanish |
| | JA661-0603 | Apple Keyboard II, Japanese |
| | TA661-0603 | Apple Keyboard II, Taiwanese |
| | KH661-0603 | Apple Keyboard II, Korean |
| | AB661-0603 | Apple Keyboard II, Arabic* |
| | B661-0603 | Apple Keyboard II, British* |
| | D661-0603 | Apple Keyboard II, German* |
| | DK661-0603 | Apple Keyboard II, Danish* |
| | F661-0603 | Apple Keyboard II, French* |
| | GR661-0603 | Apple Keyboard II, Greek* |
| | H661-0603 | Apple Keyboard II, Norwegian* |
| | HB661-0603 | Apple Keyboard II, Hebrew* |
| | PO661-0603 | Apple Keyboard II, Portugese* |
| | PS661-0603 | Apple Keyboard II, Persian* |
| | S661-0603 | Apple Keyboard II, Swedish* |
| | SF661-0603 | Apple Keyboard II, Swiss* |
| | SK661-0603 | Apple Keyboard II, Icelandic* |
| | T661-0603 | Apple Keyboard II, Italian* |
| | TU661-0603 | Apple Keyboard II, Turkish* |
| | Y661-0603 | Apple Keyboard II, Spanish* |
| | YU661-0603 | Apple Keyboard II, Yugoslavian* |
| | Z661-0603 | Apple Keyboard II, International* |

*These keyboards are not available in the United States.

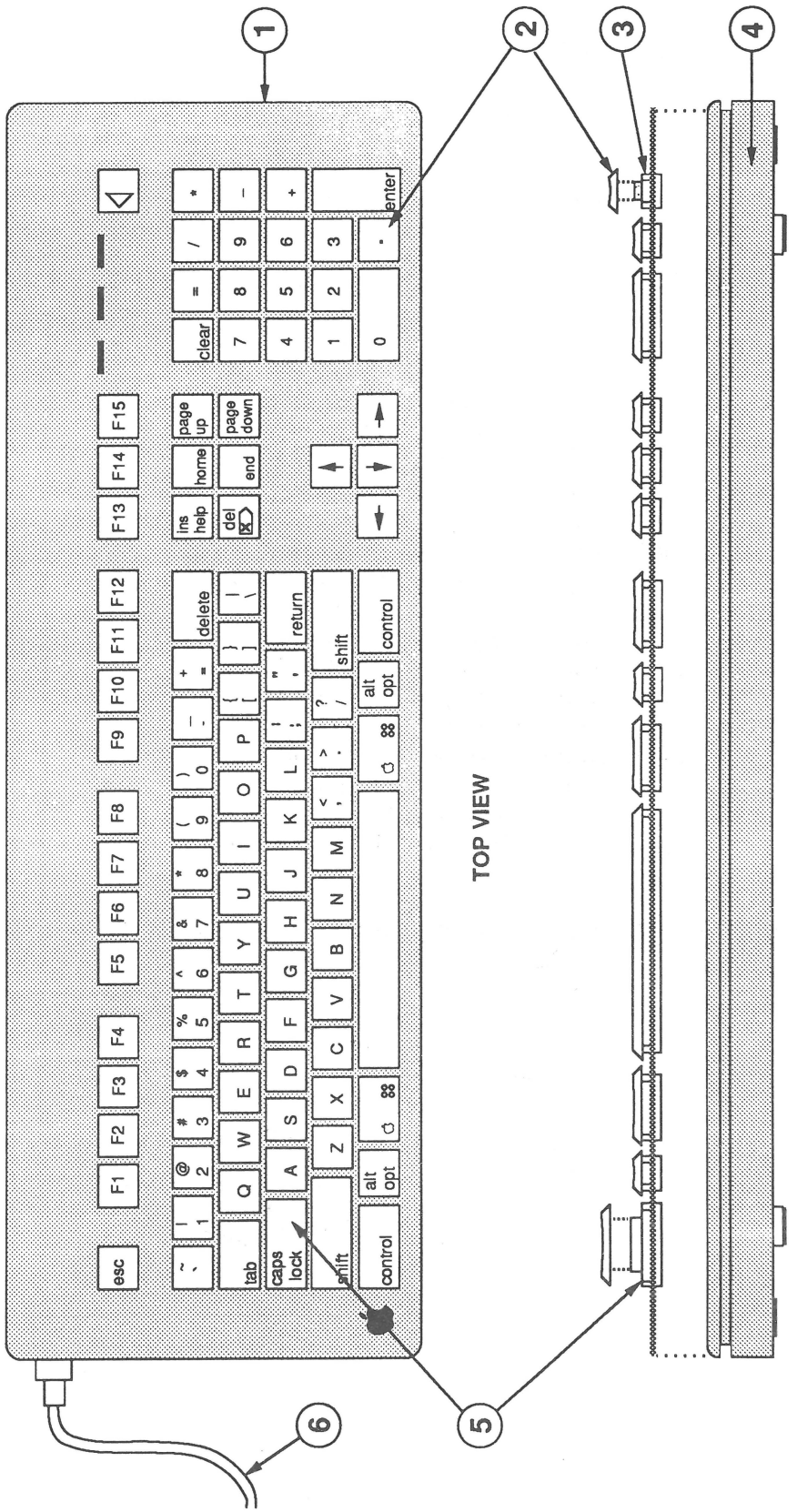


FIGURE 3

## ❑ EXTENDED KEYBOARD (Figure 3)

| Item | Part No. | Description |
|---|---|---|
| – | 661-0384 | Apple Extended Keyboard |
| | C661-0384 | Apple Extended Keyboard, French Canadian |
| | D661-0384 | Apple Extended Keyboard, German |
| | E661-0384 | Apple Extended Keyboard, Spanish |
| | F661-0384 | Apple Extended Keyboard, French |
| | T661-0384 | Apple Extended Keyboard, Italian |
| 1 | 815-1018 | Top Case |
| 2 | 658-7010 | Key Cap Set |
| 3 | 076-0209 | Keyswitch Set, ADB Kybd, Tan Plunger (Set of 10) |
| | 076-0387 | Keyswitch Set, ADB Kybd, White Plunger (Set of 10) |
| | 076-0075 | Keyswitch Set, ADB Kybd, Orange Plunger (Set of 10) |
| 4 | 815-1019 | Bottom Case |
| 5 | 970-1263 | Alps Locking Keyswitch |
| 6 | 590-0361 | Keyboard Cable, 1 meter |

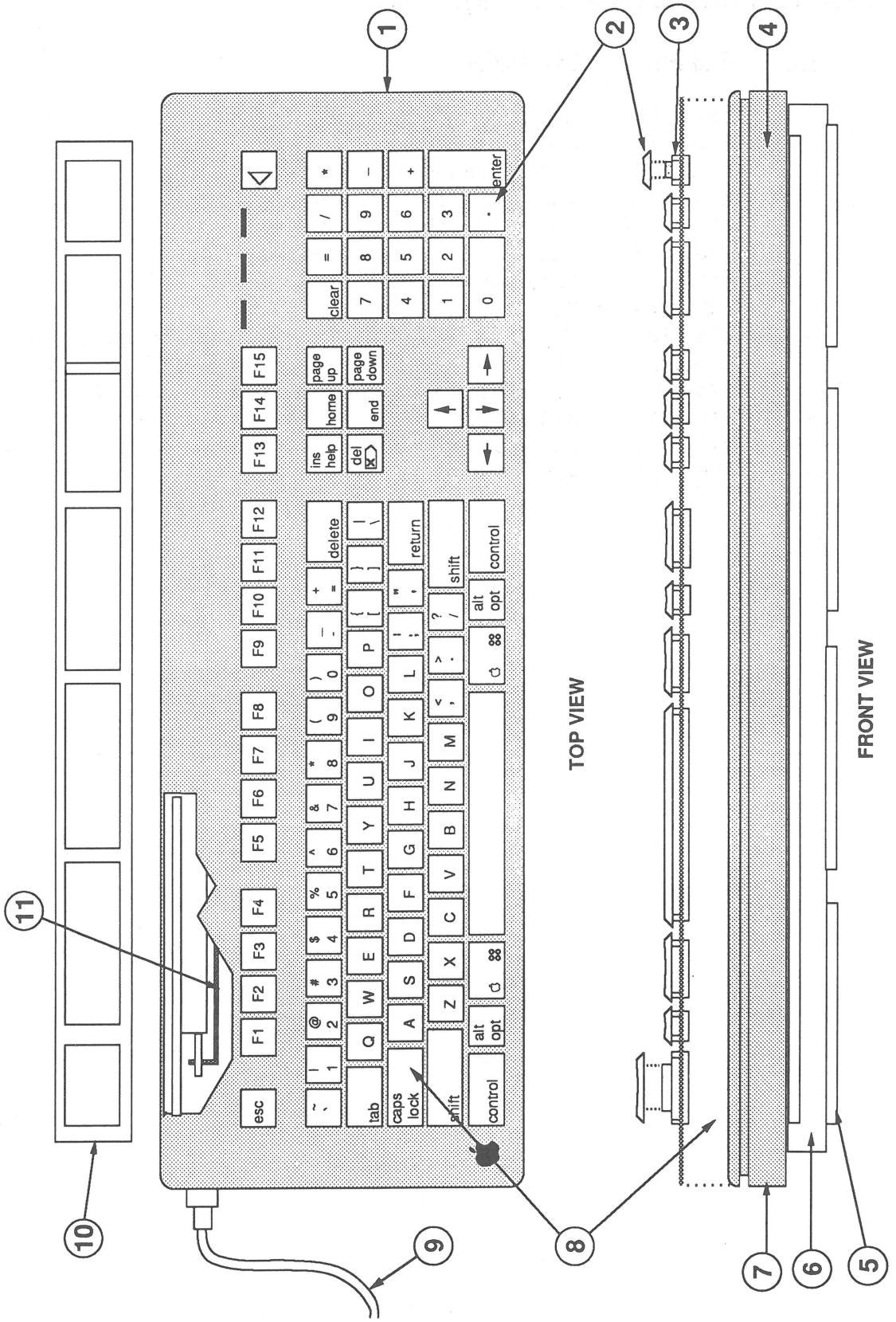


FIGURE 4

## ❑ EXTENDED KEYBOARD II (Figure 4)

| Item | Part No. | Description |
|---|---|---|
| – | 661-0543 | Apple Extended Keyboard II |
| | ED661-0544 | Apple Extended Keyboard II, ISO, German |
| | EE661-0544 | Apple Extended Keyboard II, ISO, Spanish |
| | EF661-0544 | Apple Extended Keyboard II, ISO, French |
| | ET661-0544 | Apple Extended Keyboard II, ISO, Italian |
| | EC661-0544 | Apple Extended Keyboard II, ISO, French Canadian |
| 1 | 658-5210 | Keyboard Top Case, Apple Extended Keyboard II |
| 2 | 658-7010 | Keycap Set, Apple Extended Keyboard |
| 3 | 076-0209 | Keyswitch Set, ADB Kybd, Tan Plunger (Set of 10) |
| | 076-0387 | Keyswitch Set, ADB Kybd, White Plunger (Set of 10) |
| | 076-0075 | Keyswitch Set, ADB Kybd, Orange Plunger (Set of 10) |
| 4 | 865-0057 | Front Foot, Apple Extended Keyboard II |
| 5 | 865-0067 | Rear Foot Pad, Apple Extended Keyboard II |
| 6 | 865-1139 | Adjustable Rear Foot, Apple Extended Keyboard II |
| 7 | 658-5211 | Keyboard Bottom Case, Apple Extended Keyboard II |
| 8 | 970-1263 | Locking Keyswitch, Alps |
| 9 | 590-0361 | Keyboard Cable, 1 meter |
| 10 | 001-0017 | Template, Apple Extended Keyboard II |
| 11 | 870-0030 | Foot Return Spring, Apple Extended Keyboard II |

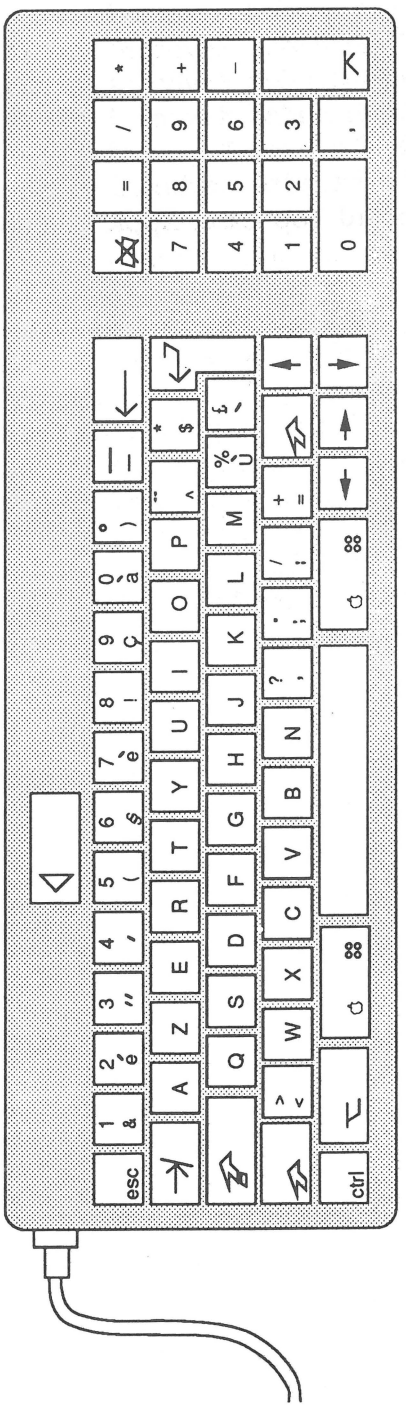

TOP VIEW

**FIGURE 5**

## ❑ ISO KEYBOARD (Figure 5)

| Item | Part No. | Description |
|---|---|---|
| – | D661-0454 | Keyboard, Apple ISO, German |
| | F661-0454 | Keyboard, Apple ISO, French |
| | T661-0454 | Keyboard, Apple ISO, Italian |

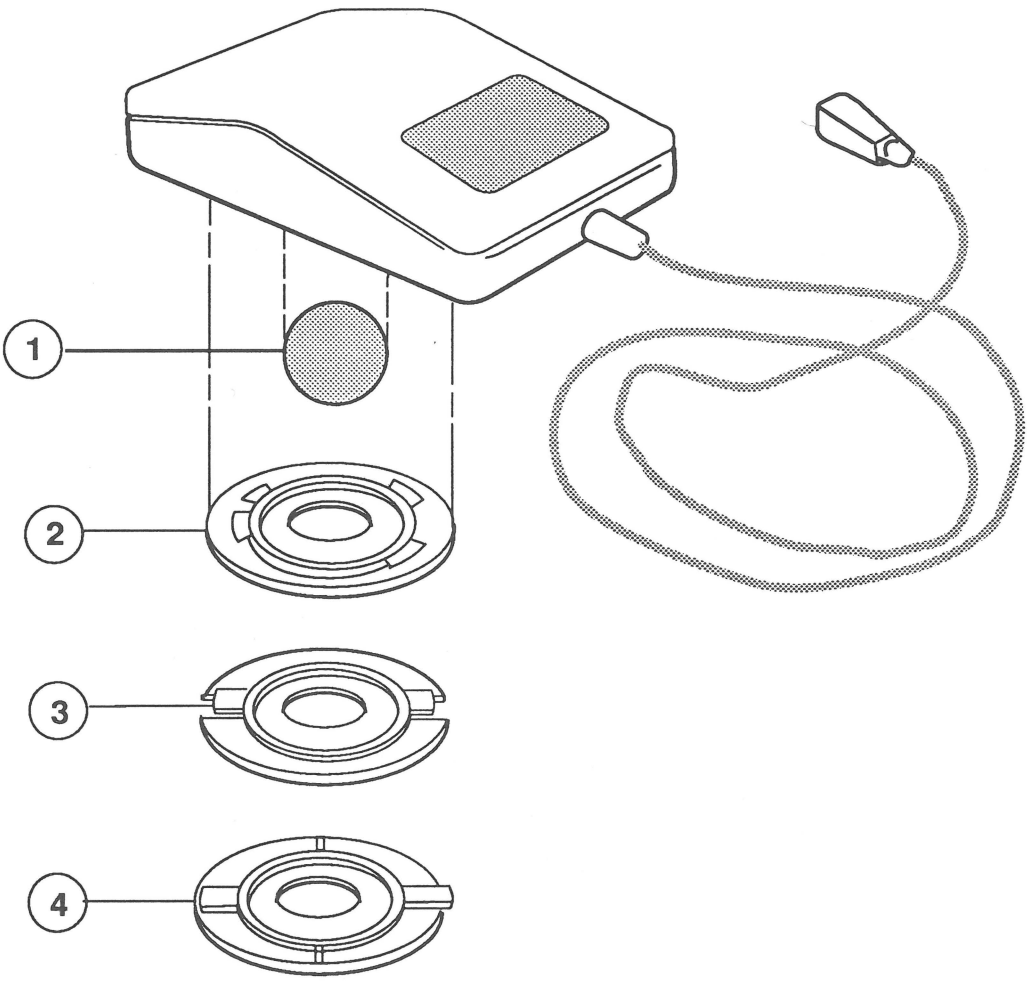


**FIGURE 6**

## ❑ MOUSE (Figure 6)

| Item | Part No. | Description |
|---|---|---|
| – | 661-0338 | Apple Desktop Bus Mouse |
| | 661-0479 | ADB Mouse (replacing part number 661-0338) |
| 1 | 699-8001 | Mouse Ball (25.4 mm dia), gray |
| | 699-8038 | Mouse Ball (21.9 mm dia), black |
| 2 | 076-0231 | Retainer, ADB Mouse (38 mm dia) |
| 3 | 815-0816 | Retainer, ADB Mouse (34 mm dia) |
| 4 | 815-1136 | Retainer, ADB Mouse |

Apple Technical Procedures

# Macintosh External Disk Drives

## Technical Procedures

## ❑ TABLE OF CONTENTS


| | | |
|---|---|---|
| **Section 0 – Service Notes** | 0.3 | Troubleshooting Macintosh External Disk Drive (400K) |
| | 0.4 | Exchanging Macintosh 800K Drive Mechanisms |
| | 0.4 | 800K Disk Drive - Diskette Ejection Problems |
| | 0.6 | Removing Diskettes That Will Not Eject |
| | 0.7 | Restoring Mouse Diskette Eject Function |
| **Section 1 – Macintosh 400K External Disk Drive Take-Apart** | 1.3 | External Disk Drive |
| **Section 2 – Macintosh 800K External Disk Drive Take-Apart** | 2.2 | Things to Remember |
| | 2.2 | Bottom Cover and Interface Cable |
| | 2.4 | Drive Assembly |
| **Illustrated Parts List** | IPL.3 | Macintosh 400K External Disk Drive (Figure 1) |
| | IPL.5 | Macintosh 800K External Disk Drive (Figure 2) |
| | IPL.7 | Service Packaging, 800K/1.4 MB Drives (Figure 3) |

©Apple Computer, Inc., 1985-1988. No portion of this document may be reproduced in any form without the written permission of Apple Computer, Inc.

Apple and the Apple logo are registered trademarks of Apple Computer, Inc.

## ❑ TROUBLESHOOTING MACINTOSH 400K EXTERNAL DISK DRIVE

If a suspect drive fails MacTest or fails to read and/or write to a disk, it will be necessary to check the stepper motor located inside the disk drive. There are two types of stepper motors used in the Macintosh 400K drive, one of which is not compatible with rev. A ROMs. Perform the following procedure to eliminate ROM/stepper motor incompatibility as a possible cause of the drive problem.

**Procedures**

1. Remove the drive's case as described in **Section 1, Take-Apart.**

2. Look for the label on the drive's stepper motor housing. If you find a circular label at the flat end facing the rear of the drive, the stepper motor is compatible with any revision of the Macintosh boot ROM and the drive should be replaced if it fails MacTest.

3. If you find a square label on the curved side of the stepper motor housing, it will be necessary to check the customer's Macintosh to see which ROM revision he has. If the Macintosh has rev. A ROMs, upgrade them to the latest revision and retry MacTest on the drive.

4. If the disk drive still fails MacTest or fails to read and/or write to the disk, replace the disk drive.

## EXCHANGING MACINTOSH 800K DRIVE MECHANISMS

Refer to **Drive Compatibility** under the **Disk Drives** tab to find out which of the Apple 3.5-inch 800K drive mechanisms may be used in the Macintosh External 800K Drive.

The drive mechanism **MUST BE REMOVED** from the housing and shipped in the Apple-approved shipping fixture (refer to **Section 3, Illustrated Parts List**). The packing diskette **MUST ALSO BE INSTALLED** to prevent damage during shipping.

## 800K DISK DRIVE - DISKETTE EJECTION PROBLEMS

Whenever a diskette from an internal or external 800K disk drive does not fully eject, the user must push the diskette back in and attempt to eject it electronically. This can be done by holding down the <SHIFT> and <COMMAND> (cloverleaf) keys and pressing 1 (for the internal drive) or 2 (for the external drive). The **Eject** command from the **File** menu can also be used. The user should attempt this two or three times. As a last resort, the user can insert a large paper clip in the pin hole located beneath and to the right of the slot where the diskette is inserted.

**IMPORTANT:** Once the diskette becomes "frozen" and does not fully eject, the user must NOT force the diskette by pulling it out from the drive. Doing so can cause possible damage to the disk drive mechanism. If the user has tried to forcibly remove the diskette from the disk drive, refer to "Removing Diskettes Which Will Not Eject" below.

In addition to the precautions discussed above, the user should be aware of other factors which can affect the insertion and ejection of a diskette.

- A diskette should be inserted by pressing the diskette gently into the drive. Avoid grasping and pushing the diskette, as this may cause the diskette to go in only part way and stop. If this happens the user should attempt to eject the diskette as described above.

- Diskettes which contain three or more labels may not slide easily into and out of the diskette slot in the Macintosh case. Should a third label be required, either the other labels should be removed first or the diskette should be discarded.

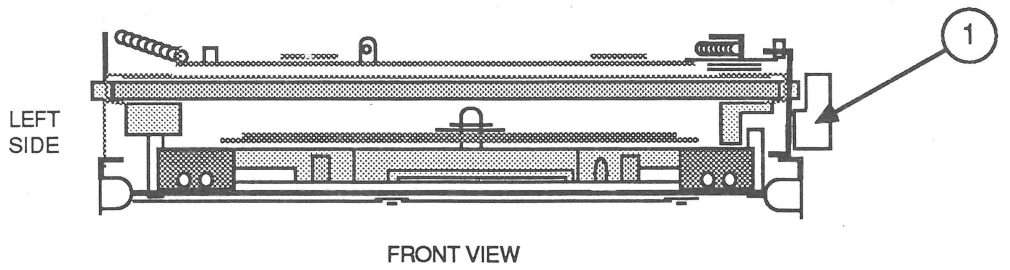


**FIGURE 1**

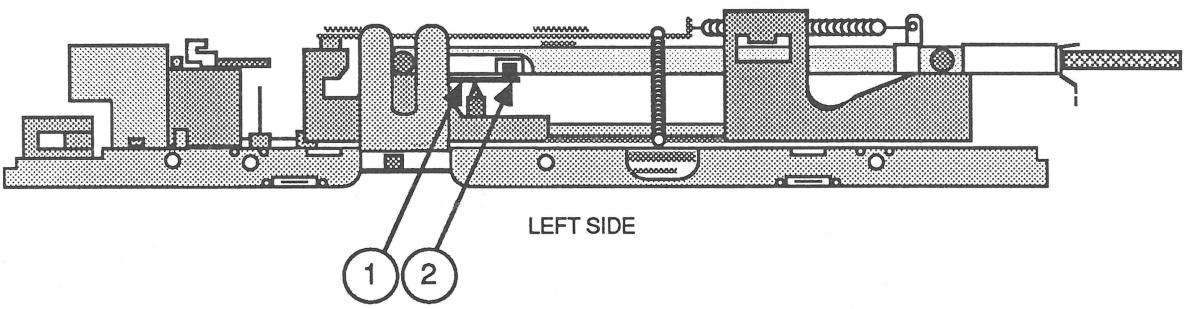


**FIGURE 2**

## Removing Diskettes Which Will Not Eject

If a diskette becomes "jammed" in a customer's disk drive, the following procedure should be used to remove it prior to returning the disk drive.

1. Remove the disk drive assembly. (See **Section 2, Take-Apart.**)

2. Place the disk drive mechanism on a flat surface, with the Printed Circuit Board facing down and the diskette opening facing you (see Figure 1).

3. If the diskette is not already fully inserted into the disk drive, push it in until it is properly seated.

4. Press the eject lever at the right side of the disk drive (see Figure 1, #1).

5. Turn the disk drive so that the left side is facing you.

6. Locate the small arm with a cylindrical cog at its end. This arm is located near the left-to-right center of the drive mechanism (see Figure 2, #1). This cog will be caught in the half-moon depression of the diskette case.

7. Insert a small screwdriver at the position shown in Figure 2, #2 and **gently** move the arm away from the diskette until the diskette pops forward slightly. Remove the diskette from the disk drive.

8. Return the defective disk drive to Apple and follow the instructions in **Section 2, Take-Apart**, to replace the disk drive with a new unit.

## ❑ RESTORING MOUSE DISKETTE EJECT FUNCTION

When the Apple 3.5 Drive mechanism is installed in the Macintosh 800K External Drive, you cannot eject a diskette from the drive by holding down the mouse button during bootup. Use the procedure below to correct the problem.

**Procedures**

1. Remove the cover and interface cable. (See Section 2, Macintosh 800K External Disk Drive Take-Apart.)

2. Orient the interface cable connector as shown in Figure 3. Locate the last wire (Figure 3, #1) on the left side in the lower row (it has an empty pin above it). This wire must be removed from the connector block to enable this particular eject function.

3. Look at the bottom of the connector block and locate the spring clip under this wire (Figure 4, #1). Using a pin pusher or tool with a sharp point, push in on the spring clip and pull gently on the wire to remove it from the connector block. You may have to pry up one edge of the block (Figure 3, #2) to completely free the connector.

4. Wrap the connector end of the exposed wire with electrical tape to prevent further electrical contact.

5. Replace the interface cable and the cover. (See Section 2, Macintosh 800K External Disk Drive Take-Apart.)

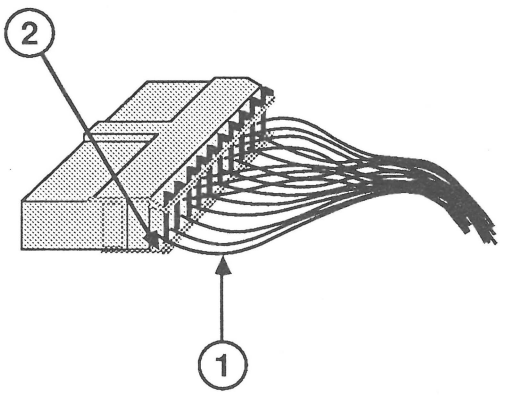


FIGURE 3

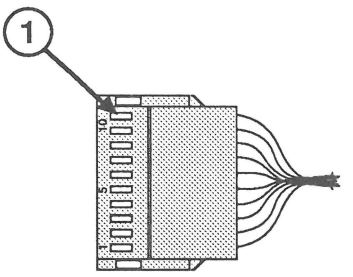


FIGURE 4

Apple Technical Procedures

# Macintosh External Disk Drives

## Section 1 – Macintosh 400K External Disk Drive Take-Apart

### ❑ CONTENTS


1.3 External Disk Drive
1.3 Materials Required
1.3 Remove and Replace

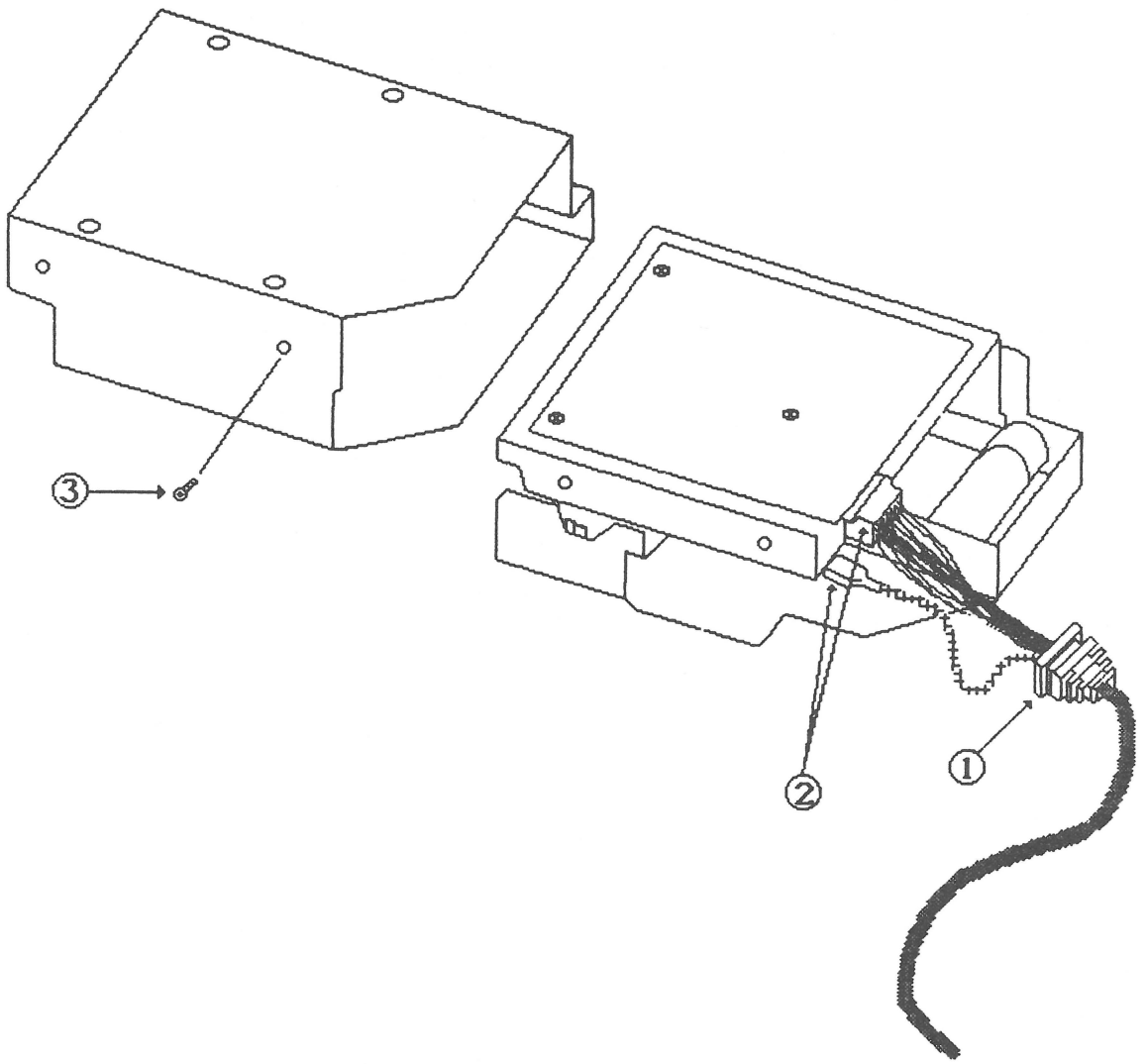


FIGURE 1

## ❑ EXTERNAL DISK DRIVE

**Materials Required**

#1 Phillips screwdriver

**Remove**

1. Turn the disk drive over with the bottom facing up.
2. Remove the six screws and washers from the bottom cover.

   ***Note:*** The two black screws do not have washers.
3. Lift up the back of the bottom cover about an inch and pull it out from the front bezel.
4. Lift up the cable grommet (see Figure 1, #1) from the case and support it with one hand; with the other hand lift up the back of the metal drive housing and remove the drive from the bottom cover.
5. Carefully remove the cable connector. Remove the screw that holds the grounding tab to the disk drive (see Figure 1, #2). Do not remove the grounding strap from the grounding tab.

   ***Note:*** The grounding tab is not included on exchange drive mechanisms.
6. Remove the screw on the outside of the metal drive housing (see Figure 1, #3).
7. Slide the drive out of the metal housing.

Apple Technical Procedures

# Macintosh External Disk Drives

## Section 2 – Macintosh 800K External Disk Drive Take-Apart

### ❑ CONTENTS


2.2 Things To Remember
2.2 Bottom Cover and Interface Cable
2.4 Drive Assembly

## ❑ THINGS TO REMEMBER

1. The Macintosh Logic board should have new ROMs installed to support the 800K external drive. If the ROMs are not installed, the Macintosh will not recognize the external drive. (Refer to Macintosh/Macintosh Plus Technical Procedures, Section 6, Additional Procedures for more information.)

2. You may use 400K media in the 800K drive, but if you do, the 800K drive may emit a high squealing sound. This sound does not indicate a problem. The 400K media is coarse and the 800K drive has very tight specifications. However, using 400K media in the 800K drive will not damage either the drive or the media.

3. When transporting or shipping the 800K drive, be sure to remove the drive mechanism from the housing and install it in the Apple-approved shipping fixture (see Section 3, Illustrated Parts List, for additional packaging information). Also install the packing diskette in the disk drive before shipping.

## ❑ BOTTOM COVER AND INTERFACE CABLE

**Materials Required**

Phillips screwdriver–medium

**Remove**

1. Remove the four screws (see Figure 1, #1).

2. Lift the bottom cover off.

3. Remove the screw from the clamp holding the interface cable in place (see Figure 2, #1).

4. Disconnect the interface cable from the drive (see Figure 2, #2).

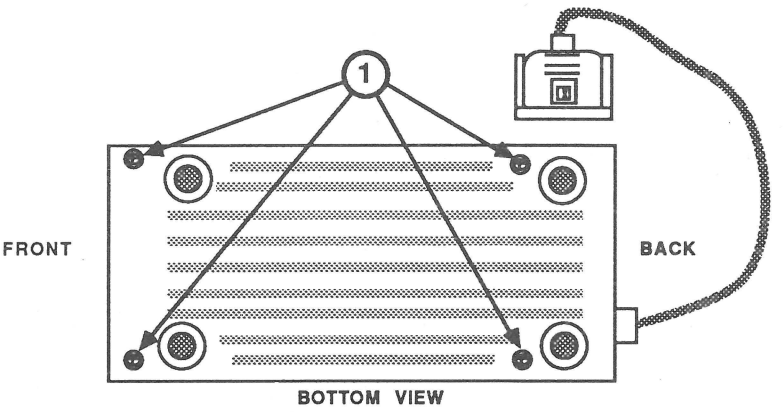


**FIGURE 1**

**Replace**

1. Connect the interface cable to the drive (see Figure 2, #2).

2. Position the clamp holding the interface cable and replace the screw (see Figure 2, #1).

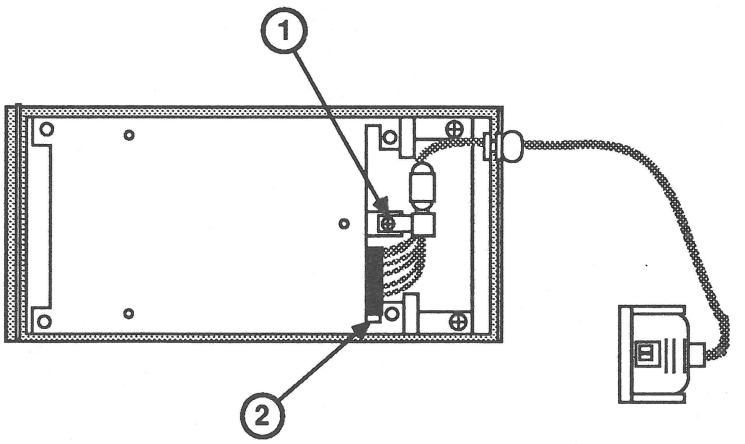


**FIGURE 2**

3. Position the bottom cover and replace the four screws (see Figure 1, #1).

***WARNING:*** *Make sure the Macintosh is powered off before connecting the disk drive to the built-in port. Failure to do so can result in damage to the Disk Drive and/or the Macintosh Logic Board.*

## ❑ DRIVE ASSEMBLY

**Materials Required**

Phillips screwdriver—medium

**Remove**

1. Remove the bottom cover and the interface cable.
2. Remove the two screws (see Figure 3, #1).
3. Lift the drive assembly from the top cover.
4. Remove the four screws that hold the drive assembly in the housing. There are two screws on each side. Figure 4, #1, shows one side.
5. Slide the drive assembly out of the housing.
6. To ship the drive assembly, first intall it on the Apple-approved shipping fixture. See Section 3, Illustrated Parts List, for additional packaging information.

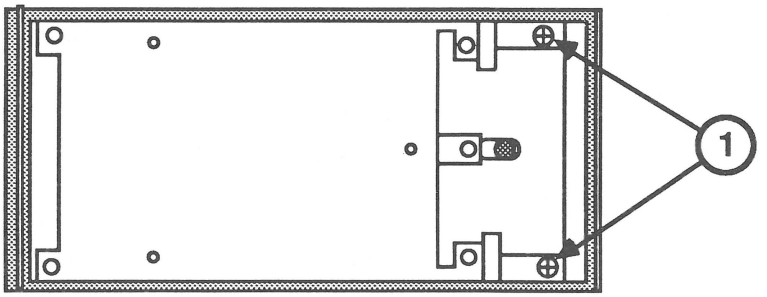


**FIGURE 3**

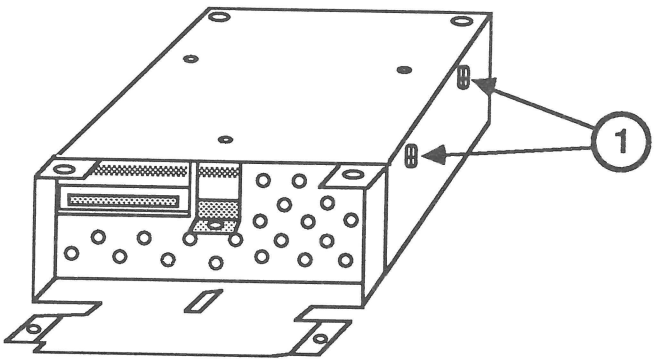


**FIGURE 4**

**Replace**

***Note:*** If you are replacing the Macintosh 800K drive mechanism with an Apple 3.5 Drive mechanism, the user will not be able to eject a diskette in the drive by holding down the mouse button during bootup. Refer to "Restoring Mouse Diskette Eject Function" in Section 0, Service Notes for the procedure to enable this function.

1. If necessary, remove the shipping fixture from the new drive assembly. Then position the housing top-up and slide the drive assembly, connectors first, into the housing. The drive assembly fits snugly between the screw mounts on the housing.

2. Start the four screws that hold the drive assembly in place. After all four screws are started, tighten each one. There are two screws on each side of the housing. Figure 4, #1, shows one side.

3. Position the drive assembly on the top cover, and install the two screws (Figure 3, #1).

4. Replace the interface cable and the bottom cover.

***WARNING:*** *Make sure the Macintosh is powered off before connecting the disk drive to the built-in port. Failure to do so can result in damage to the Disk Drive and/or the Macintosh Logic Board.*

Apple Technical Procedures

# Macintosh External Disk Drives

## Illustrated Parts List

## ❑ CONTENTS

IPL.3 Macintosh 400K External Disk Drive (Figure 1)
IPL.5 Macintosh 800K External Disk Drive (Figure 2)
IPL.7 Service Packaging, 800K/1.4 MB Drives (Figure 3)

The figures and lists in this section include all piece parts that can be purchased separately from Apple for the Macintosh External Disk Drives, along with their part numbers. These are the only parts available from Apple. Refer to your *Apple Service Programs Manual* for prices.

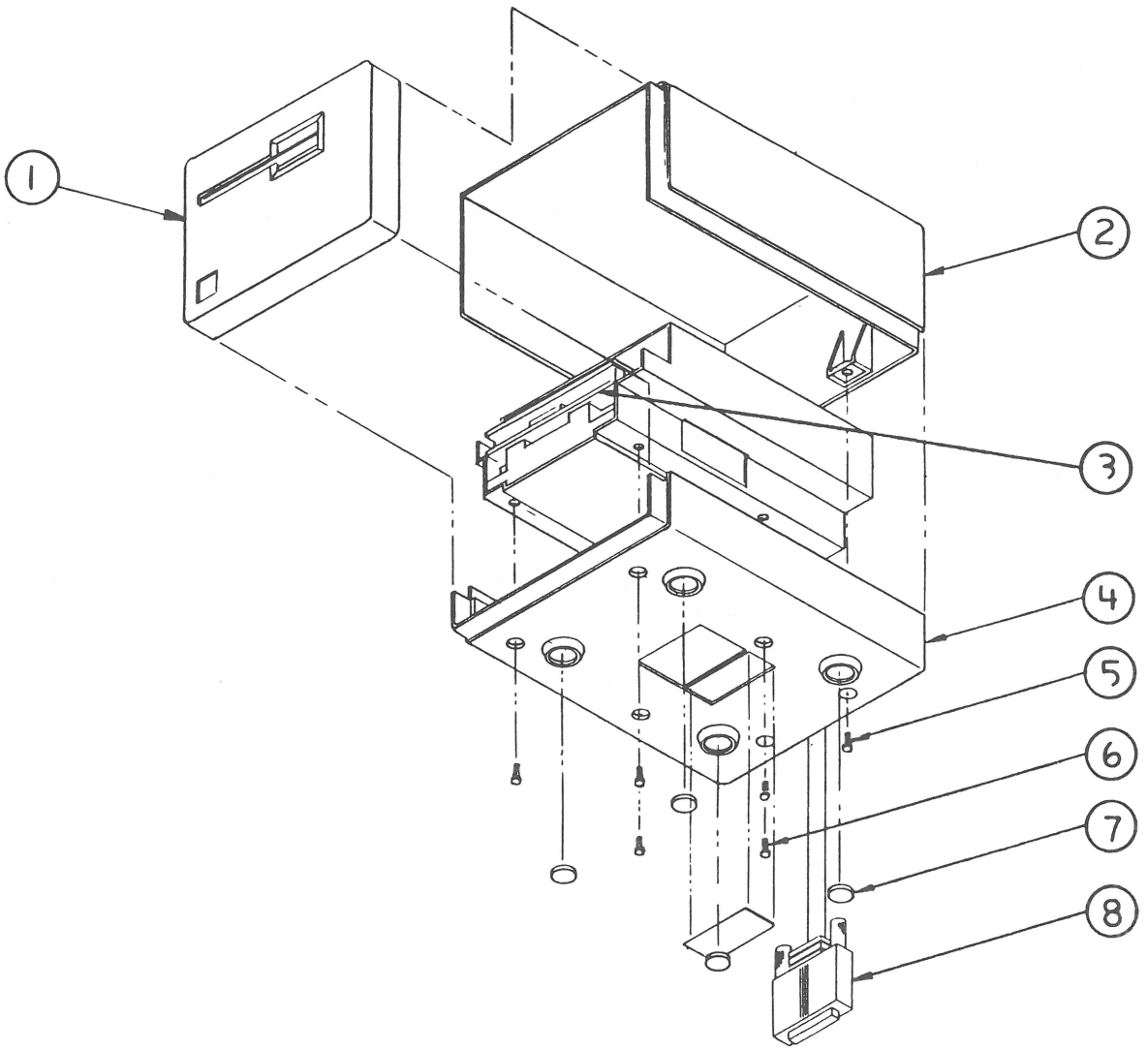


**FIGURE 1**

## ❑ MACINTOSH 400K EXTERNAL DISK DRIVE (Figure 1)

| Item | Part No. | Description |
|---|---|---|
| 1 | 815-0798 | Bezel, Macintosh External 400K Drive |
| 2 | 815-0796 | Upper Cover, Macintosh 400K External Drive |
| 3 | 661-76156 | 400K Micro Disk Assembly |
| 4 | 815-0795 | Lower Cover, Macintosh 400K External Drive |
| 5 | 424-1001 | Screw, Tap M2.9 x 1.06 x 13 |
| 6 | 467-3000 | Screw, M3.5 x 10 |
| 7 | 865-0051 | Macintosh Foot |
| 8 | 590-0183 | Macintosh 400K External Drive Cable |

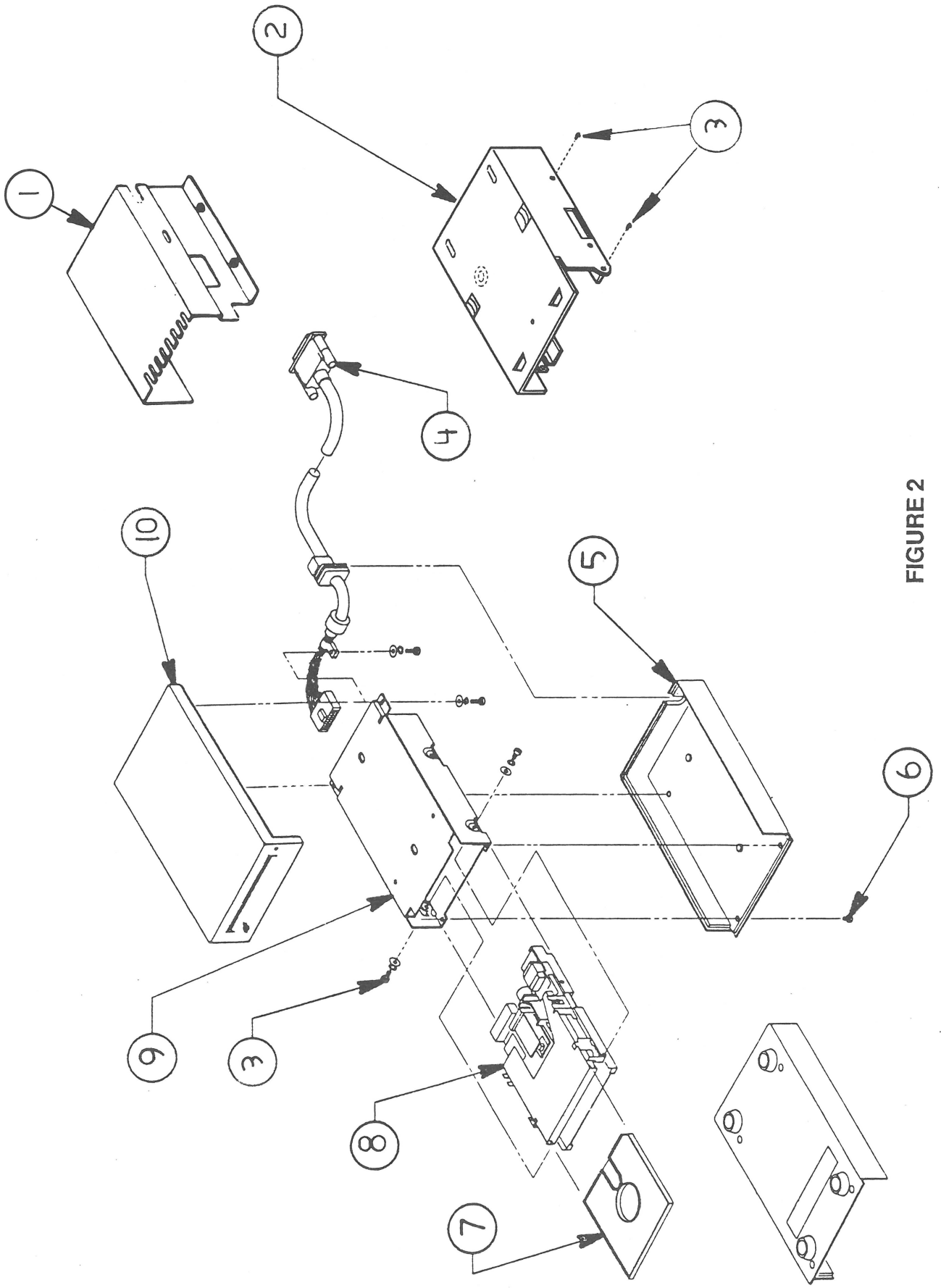


FIGURE 2

## ❑ MACINTOSH 800K EXTERNAL DISK DRIVE (Figure 2)

| Item | Part No. | Description |
|---|---|---|
| 1 | 805-0217 | 800K Internal Drive Shield (for transporting) |
| 2 | 805-5050 | Floppy Metal Housing (for transporting) |
| 3 | 462-3401 | Screw, M3 x 6, with two washers |
| 4 | 590-0255 | External Drive Cable, 800K |
| 5 | 630-5181 | Bottom Case Assembly, 800K Drive |
| 6 | 416-1305 | Screw, Torx, 800K External Drive |
| 7 | 003-0003 | Packing Disk (for transporting) |
| 8 | 661-0345 | 800K Mechanism, Apple 3.5 Drive |
| 9 | 948-0022 | Shield, 800K External Drive |
| 10 | 630-5180 | Top Case Asembly, 800K Drive |

The floppy metal housing for transporting is required when using using 1.4MB drive packaging.

The 800K internal drive shield for transporting is required when using 800K drive packaging.

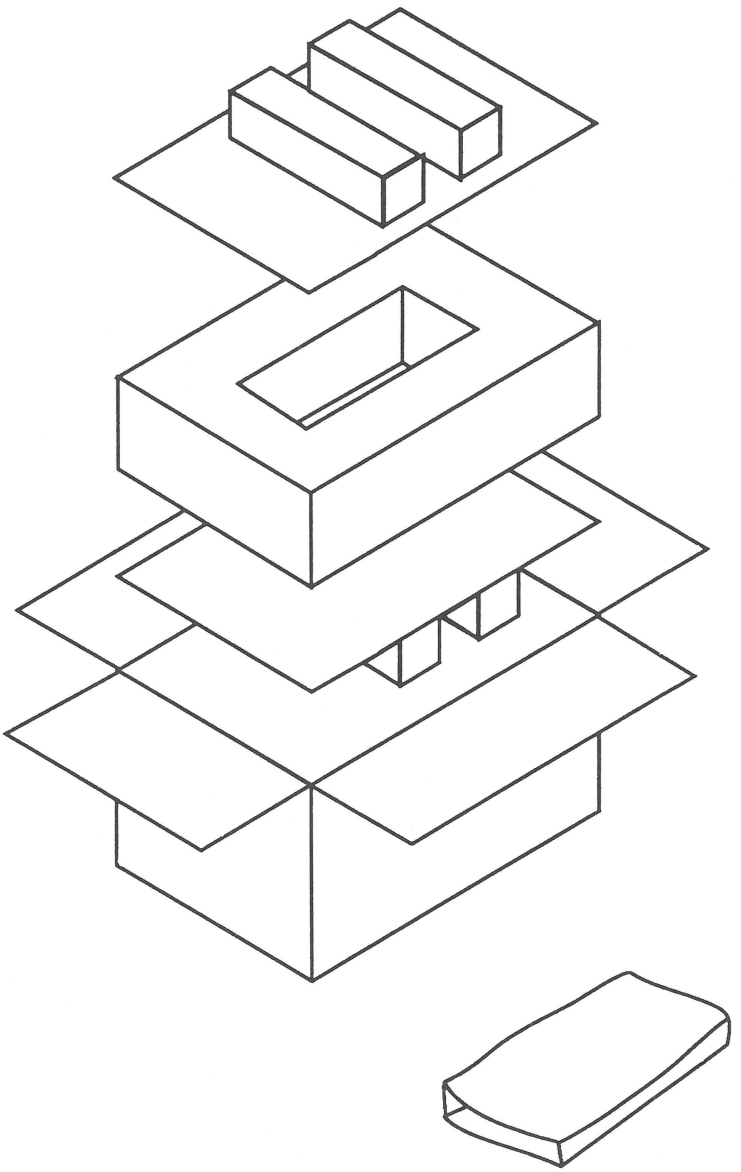

**FIGURE 3**

## ❑ SERVICE PACKAGING, 800K/1.4 MB DRIVES (Figure 3)

| Item | Part No. | Description |
|---|---|---|
| – | 602-0210 | Service Packaging, 800K/1.4 MB Drives |

Apple Technical Procedures

# Hard Disk 20

## Technical Procedures

## ❑ TABLE OF CONTENTS


| | | |
|---|---|---|
| **Section 1 – Basics** | 1.2 | Introduction |
| | 1.2 | Setting Up |
| | 1.3 | Reinitializing |
| **Section 2 – Diagnostics** | 2.1 | See *SCSI Hard Disk Drives Technical Procedures* |
| **Section 3 – Troubleshooting** | 3.2 | Introduction |
| | 3.2 | Things to Remember |
| | 3.4 | Flowchart |
| | 3.5 | Notes |
| | 3.6 | Special Problems |
| | 3.6 | Startup Problems |
| | 3.9 | Daisy-Chaining Problems |
| **Section 4 – Take-Apart** | 4.3 | Tools Needed |
| | 4.3 | Top Cover |
| | 4.5 | Controller Board |
| | 4.7 | Bottom Shield |
| | 4.9 | Fan |
| | 4.11 | Power Supply |
| | 4.13 | Hard Disk Assembly |
| **Illustrated Parts List** | IPL.3 | Hard Disk 20 |

©Apple Computer, Inc., 1985-1989. No portion of this document may be reproduced in any form without the written permission of Apple Computer, Inc.

Macintosh, ImageWriter, AppleTalk, Apple, and the Apple logo are registered trademarks of Apple Computer, Inc.

# Hard Disk 20 Technical Procedures

## Section 1

## Basics

**Contents:**

Introduction.....1.2
Setting Up.....1.2
Initializing.....1.3

## INTRODUCTION

The Hard Disk 20 gives the Macintosh™ personal computer 20 megabytes of storage. Twenty megabytes equals about 50 single-sided 3 1/2 inch diskettes. The Hard Disk 20 is connected to the external drive port on the back of the Macintosh. If you need more storage, you can link another Hard Disk 20 or an external disk drive to the first Hard Disk 20 connected.

## SETTING UP

**NOTE:** The Hard Disk 20 is a mechanical device with moving parts. Rough handling such as jarring or bumping, especially while the hard disk is running, can cause a mechanical failure or damage stored information.

### Connecting and Switching On the Hard Disk 20

1. Make sure power is off to both the Hard Disk 20 and the Macintosh.

2. Attach the interface cable from the Hard Disk 20 to the external drive port on the rear of the Macintosh.

3. Attach the Hard Disk 20 power cord to the hard disk, and plug the power cord into a three-prong AC outlet.

4. Power on the Hard Disk 20. (The Macintosh should be off.)

   The hard disk will whir and chirp. In 15 seconds the green light in front should be steady (unblinking).

5. For the Macintosh 512K (or 128K):

   Insert the Hard Disk 20 Startup diskette into the internal drive on the Macintosh and power on the system.

   If the Hard Disk 20 has already been initialized, the Macintosh will eject the Hard Disk 20 Startup diskette, and the desktop will appear with a hard disk icon in the upper right-hand corner.

   If the Hard Disk 20 is damaged or uninitialized, the Macintosh will give you options to repair it or initialize it.

For the Macintosh Plus:

Power on the Macintosh Plus, and the desktop will appear with a hard disk icon in the upper right-hand corner.

If the Hard Disk 20 is damaged or uninitialized, the Macintosh Plus will display a diskette icon with a flashing question mark on the screen.

## Switching Off the Hard Disk 20

**IMPORTANT: Never switch off the power if the green light is blinking. You may lose information on the hard disk.**

1. If you are working with an application program, quit and return to the desktop.

2. Wait till the green light is steady and unblinking. Power off the Hard Disk 20.

3. Power off the Macintosh.

## INITIALIZING

If you need to reinitialize (or erase) the hard disk, everything stored on the hard disk will be removed permanently. This is the major reason for keeping backup diskettes. Refer to "Startup Problems" in **Section 3, Troubleshooting**, before you reinitialize the hard disk.

If the customer has not backed up his files and the hard disk will not come ready after following the troubleshooting flowcharts, the information that was stored is gone.

To reinitialize a Hard Disk 20:

1. Pull down the **Special** menu and select **Erase Disk.**

2. Copy the **System Folder** from the Hard Disk 20 Startup diskette onto the hard disk icon in the upper right-hand corner.

3. Copy any applications and backup files onto the hard disk.

Apple Technical Procedures

# Hard Disk 20

## Section 2 – Diagnostics

---

The *Hard Disk Test* program found on the *Macintosh Hard Disk Test* diagnostic disk tests internal and external Macintosh SCSI drives and the non-SCSI Hard Disk 20. The procedures for testing SCSI and non-SCSI drives are the same. **For information about using the *Hard Disk Test* program to test a Hard Disk 20 drive, refer to the diagnostics section of the *SCSI Hard Disk Drive Technical Procedures*.**

# Hard Disk 20 Technical Procedures

## Section 3

## Troubleshooting

**Contents:**


Introduction.....3.2
Things To Remember.....3.2
Hard Disk 20 Troubleshooting Flowchart.....3.4
Notes.....3.5
Appendix - Special Problems
  Startup Problems.....3.6
  Daisy-Chaining Problems.....3.9

## INTRODUCTION

This troubleshooting guide contains a flowchart and a table of explanations for the flowchart.

Read **Things to Remember** before you begin troubleshooting. There are numerous things you need to know about the Hard Disk 20 in order to troubleshoot it effectively.

## THINGS TO REMEMBER

The Hard Disk 20 has a total of three exchange modules: the controller card; the power supply; and the hard disk assembly, which consists of the hard disk and the analog card. At first glance the Hard Disk 20 may appear to be simple to troubleshoot; however, there are a few important things you need to do and be aware of before starting.

1. Be sure to stress to your customers the importance of backing up all files on diskette. This will make your job easier and the customer a lot happier if the hard disk becomes faulty.

2. If the customer has not backed up his files but you can get the hard disk to come ready by following the troubleshooting flowchart, you may still be able to recover some or all of his data by following the procedures in "Startup Problems" (in this section). **Do not reinitialize (or erase) the hard disk until you have tried all possible data recovery procedures.** Once you reinitialize (or erase), everything stored on the hard disk is removed permanently.

   If the hard disk will not come ready after you have followed the procedures in the troubleshooting flowchart, there is no way to recover the data.

3. Be sure to test on a **known-good** Macintosh. Once the hard disk is functioning properly, test it with the customer's Macintosh.

4. When returning the hard disk assembly for exchange, it **must be** shipped in Apple-approved packaging. Save the exchange hard disk assembly boxes and packaging materials for future use.

5. With a Macintosh Plus, a Hard Disk 20 Startup diskette is not necessary.

**CAUTION:** The interface cable from the controller board to the hard disk is not a standard ribbon cable. Do not substitute a different ribbon cable for this connection. Replace only with the specified cable from the parts list.

# HARD DISK 20
# TROUBLESHOOTING FLOWCHART

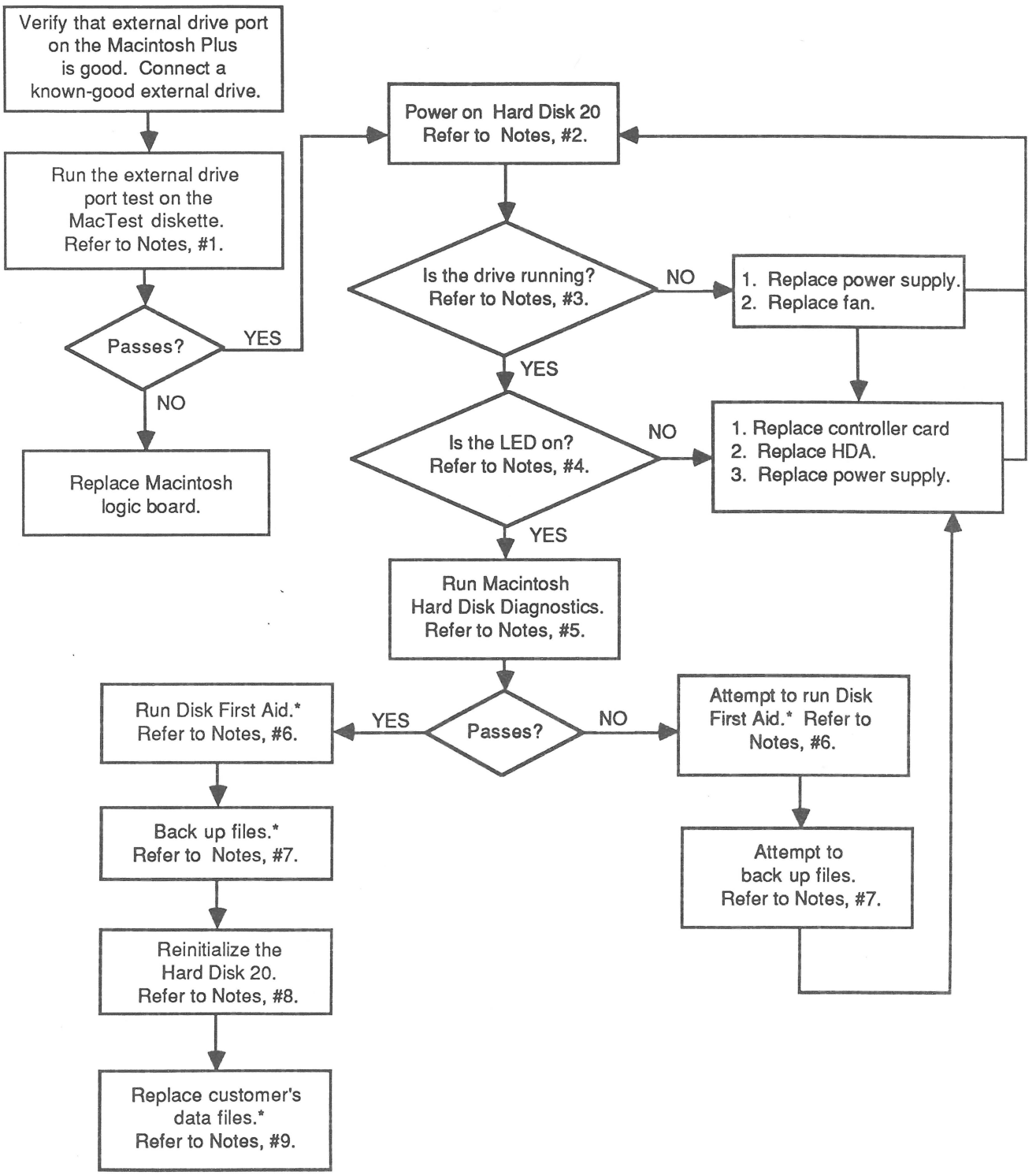

**NOTES**

**Perform steps marked with an asterisk (*) only if the customer has not backed up his data files.**

1. This step verifies that the external drive port on the system is functioning correctly. Refer to **Macintosh Technical Procedures, Section 2, Diagnostics,** for complete information on running the external drive test.

2. Power on the Hard Disk 20. Do not turn on the system until told to do so.

3. You should hear the hard disk come up to operating speed. Verify that the fan is working by looking at it on power up with the top cover removed.

4. The LED is on when the hard disk is ready. It flashes when the heads are moving. If the light is not on and steady after 60 seconds, this usually indicates that the HDA assembly is bad.

5. Refer to **Section 2, Hard Disk 20 Diagnostics.**

*6. Disk First Aid is a program that attempts to repair the file structure on the hard disk. Refer to "Startup Problems" in this section for instructions.

*7. Back up as many files as possible before continuing.

8. To reinitialize the hard disk, refer to **Section 1, Basics.**

*9. After initializing the hard disk, copy the customer's data from diskettes back onto the hard disk.

## APPENDIX - SPECIAL PROBLEMS

### Startup Problems

**NOTE:** These procedures will cure failures due to software (Finder) problems. They do not address hardware problems, which may be the original cause of the problem. Refer to the Hard Disk 20 Troubleshooting Flowchart for possible hardware causes.

If the Finder program on the Hard Disk 20 is corrupted, the following four symptoms will appear when you attempt to start up from the Hard Disk 20:

a. The system will fail to complete its startup.
b. The diskette will be ejected.
c. The Macintosh and the Hard Disk 20 will lock up (will not accept mouse or keyboard input).
d. The Hard Disk 20 icon will not be present on the desktop.

Perform the following four procedures one at a time, in the order listed, to attempt to correct any or all of the problems listed above.

### 1. Run Disk First Aid on the Hard Disk 20.

Disk First Aid can be used to repair any hard disk or double-sided 800K diskette that uses the Macintosh hierarchical file system (HFS).

Disk First Aid is included on the Hard Disk Drive Diagnostic diskette for the Macintosh. The diskette must be used as the startup diskette.

To repair a Hard Disk 20:

a. Insert the Hard Disk Drive Diagnostic diskette into the internal drive of the Macintosh. Power on the Macintosh first, then the Hard Disk 20.

b. Open the diskette icon, then the **Disk First Aid** icon.

c. A display window will list one of the attached drives. Click on **Drive** to change selections. When the Hard Disk 20 is listed, click on **Open.**

A second screen will appear listing the volume name

d. Select **Repair Automatically** from the **Options** menu.

e. Click on **Start** to begin the repair and verification process. You may stop the application at any time by clicking on the **Stop** button. Or you may choose **Pause**, then **Resume**.

f. When the Hard Disk 20 has been repaired and/or verified, pull down the **File** menu and click on **Close**.

g. When you are finished, select **Quit** from the **File** menu.

2. **Replace the Hard Disk 20's Finder File.**

a. Power off the Macintosh, and insert the Hard Disk 20 Startup diskette into the internal disk drive.

b. Power the Macintosh on.

c. When you see the **Welcome to Macintosh** screen, hold down the mouse button until the desktop appears and the wristwatch turns into a pointer.

The Hard Disk 20 Startup diskette is now the current startup diskette.

d. Drag the **System** file and the **Finder** file from the **System Folder** on the Hard Disk 20 Startup diskette to the **Hard Disk 20** icon to replace the corrupted files.

e. On completion, power off the Macintosh and start up from the Hard Disk 20 Startup diskette.

f. Run the diagnostics.

If the problem still exists, continue to step 3.

**3. Rebuild the Hard Disk 20's Desktop.**

a. Press and hold down the <Command> and <Option> keys, while you start up from the Hard Disk 20 Startup diskette. (Be sure to hold down both keys continuously during the entire booting sequence.)

   A message will appear asking if you want to rebuild the Desktop file.

b. Select **OK**.

   The Desktop will be rebuilt. (This will take a few minutes.)

c. Power off the Macintosh and start up from the Hard Disk 20 Startup diskette.

d. Run the diagnostics.

   If the problem still exists, continue to step 4.

**WARNING:** If you perform step 4, all data on the hard disk will be erased.

**4. Initialize the Hard Disk 20.**

a. Press and hold down the <Command>, <Option>, and <Tab> keys while you start up from the Hard Disk 20 Startup diskette. (Be sure to hold down all three keys continuously during the entire startup sequence.)

   A message will appear asking if you want the Hard Disk 20 completely erased and its contents destroyed.

b. Select **OK**.

   This choice erases all data on the hard disk.

c. Run the diagnostics.

## Daisy-Chaining Problems

Up to three additional hard or floppy disk drives may be "daisy-chained" to the Hard Disk 20 through the expansion port that is connected to the Hard Disk 20's controller board. If a customer has attempted to set up a daisy-chain and has found that not all of his attached devices are recognized by the Macintosh (that is, their icons don't show up on the desktop) or that their operation is intermittent or "flaky," the problem **may** be in the Hard Disk 20's expansion port linkage. Attempt to isolate the problem by using the following troubleshooting procedure:

1. Check for faulty or loose cables.

2. If the cables are OK, check to see if each of the daisy-chained drives will work when connected directly to the Macintosh.

3. If the drives function normally when connected directly to the Macintosh, then the likely cause is a faulty expansion port connector on the controller board of the first Hard Disk 20 in the chain, and the controller board must be replaced.

# Hard Disk 20 Technical Procedures

## Section 4

## Take-Apart

**Contents:**


Tools Needed.....4.3
Top Cover.....4.3
Controller Board.....4.5
Bottom Shield.....4.7
Fan.....4.9
Power Supply.....4.11
Hard Disk Assembly.....4.13

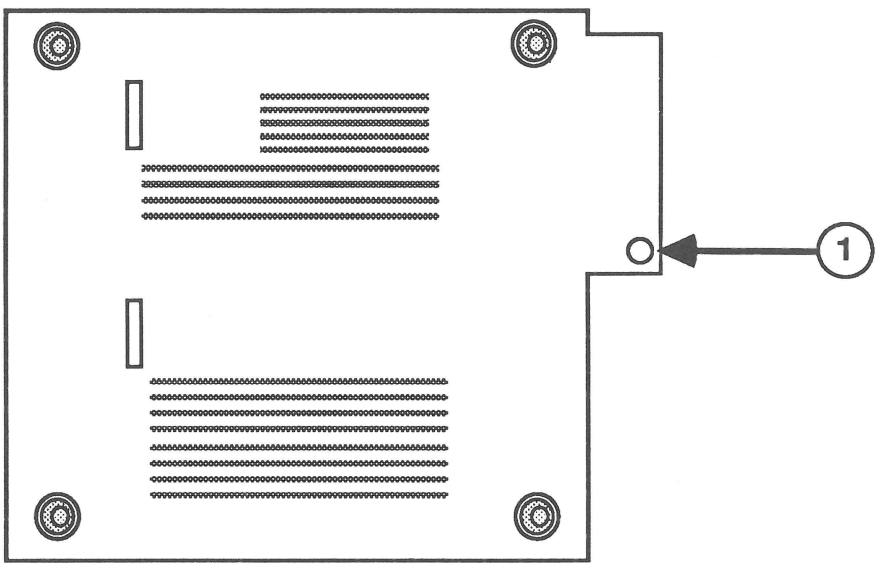


**FIGURE 1**

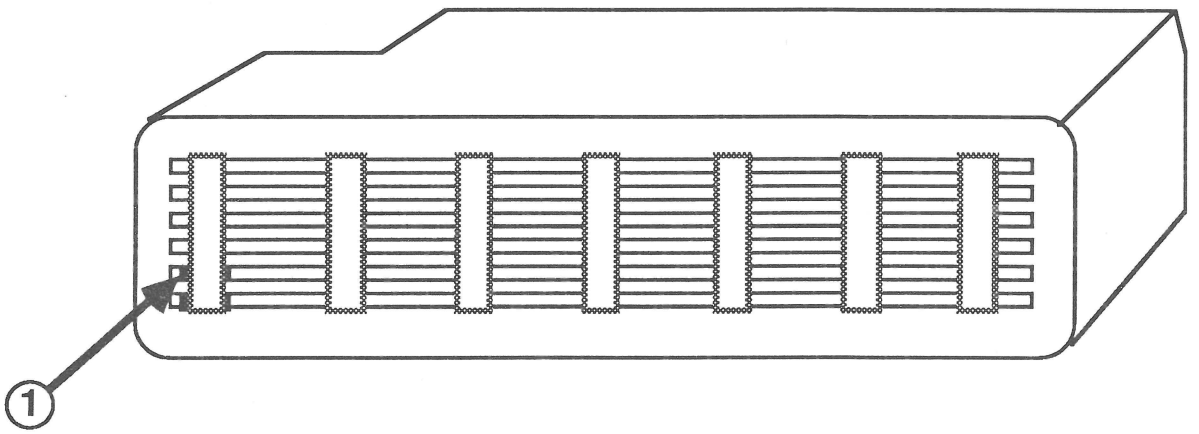


**FIGURE 2**

## TOOLS NEEDED

The following will be needed for the take-apart procedures:

Macintosh pull-apart tool
Macintosh torx driver
A #2 phillips screwdriver
A jeweler's screwdriver
A medium flathead screwdriver

## REMOVE AND REPLACE TOP COVER

### Remove

1. Gently place the Hard Disk 20 upside down.
2. Remove the one torx screw shown in Figure 1, #1.
3. Locate the two tabs, one on each side of the hard disk (see Figure 2, #1).
4. Gently insert a jeweler's screwdriver to release one of the tabs, and use the Macintosh pull-apart tool to lift the cover up. Repeat this for the other side of the hard disk.
5. Pull the cover back and lift it free.

### Replace

1. Slide the cover towards the front and gently push it into place.

   You will hear a "pop" when the tabs interlock.
2. Replace the screw shown in Figure 1, #1.

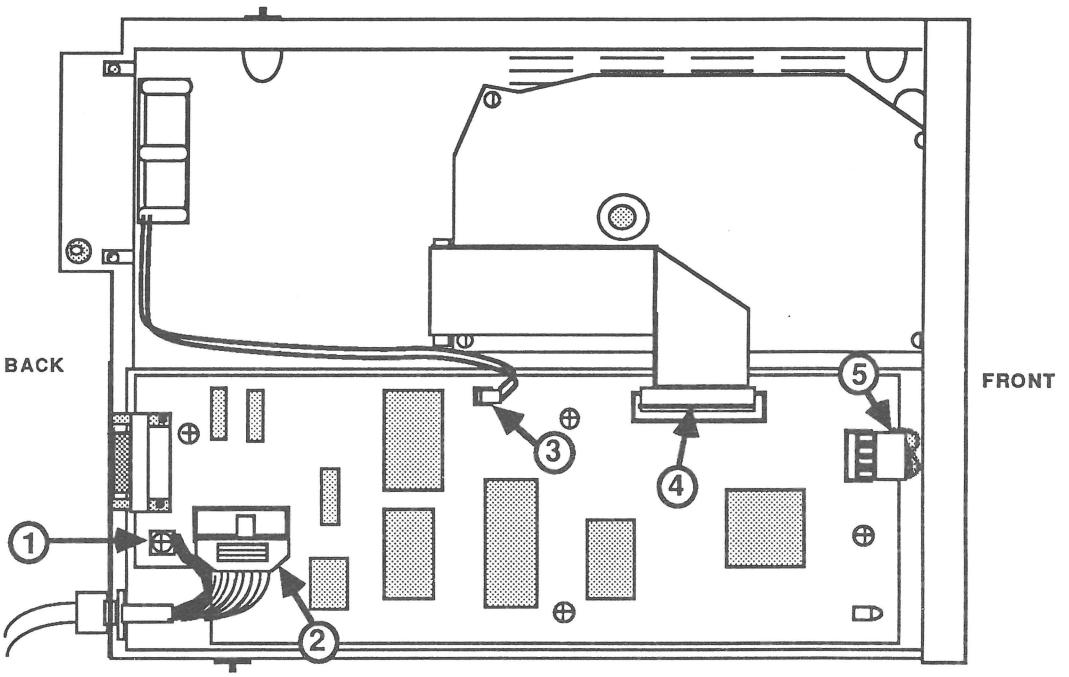


FIGURE 3

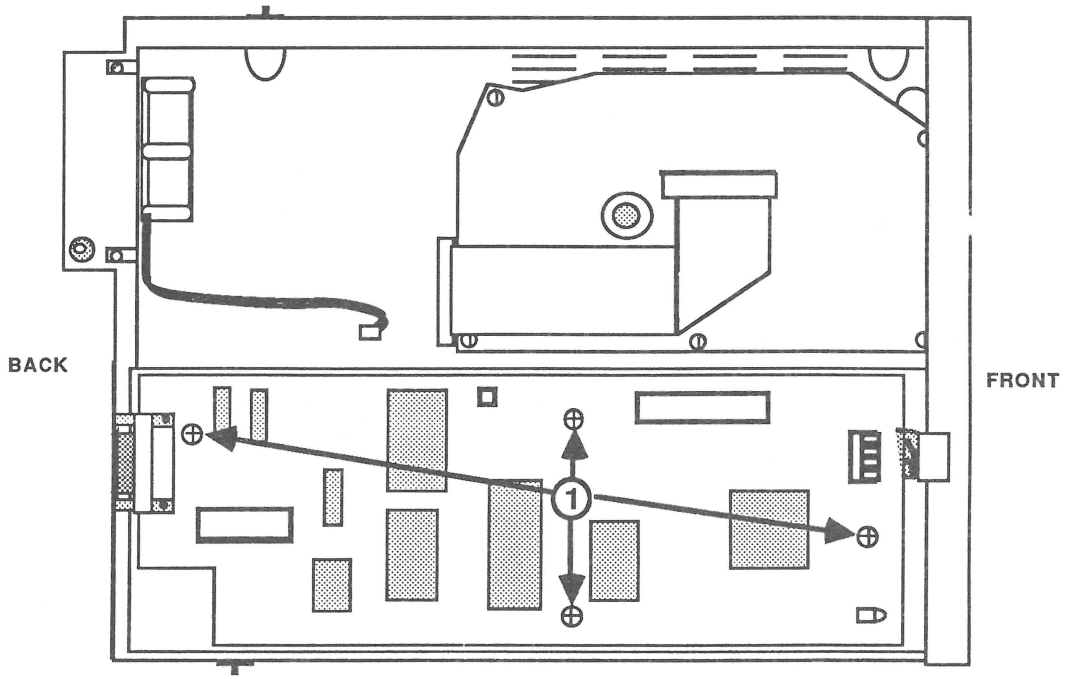


FIGURE 4

## REMOVE AND REPLACE THE CONTROLLER BOARD

### Remove

1. Remove the top cover.
2. Remove the grounding screw (see Figure 3, #1).
3. Disconnect the interface cable and remove it (see Figure 3, #2).
4. Unplug the fan connector (see Figure 3, #3).
5. Disconnect the interface cable from the controller board to the hard disk (see Figure 3, #4).
6. Unplug the power supply connector (see Figure 3, #5).
7. Remove the four screws (see Figure 4, #1).
8. Lift off the controller board.

### Replace

1. Place the controller board on top of the power supply so the standoffs line up.
2. Replace the four screws (see Figure 4, #1).
3. Plug in the power supply connector (see Figure 3, #5).
4. Connect the interface cable from the hard disk to the controller board (see Figure 3, #4).
5. Plug in the fan connector (see Figure 3, #3).
6. Reposition the interface cable and connect it (see Figure 3, #2).
7. Replace the grounding screw (see Figure 3, #1).
8. Replace the top cover.

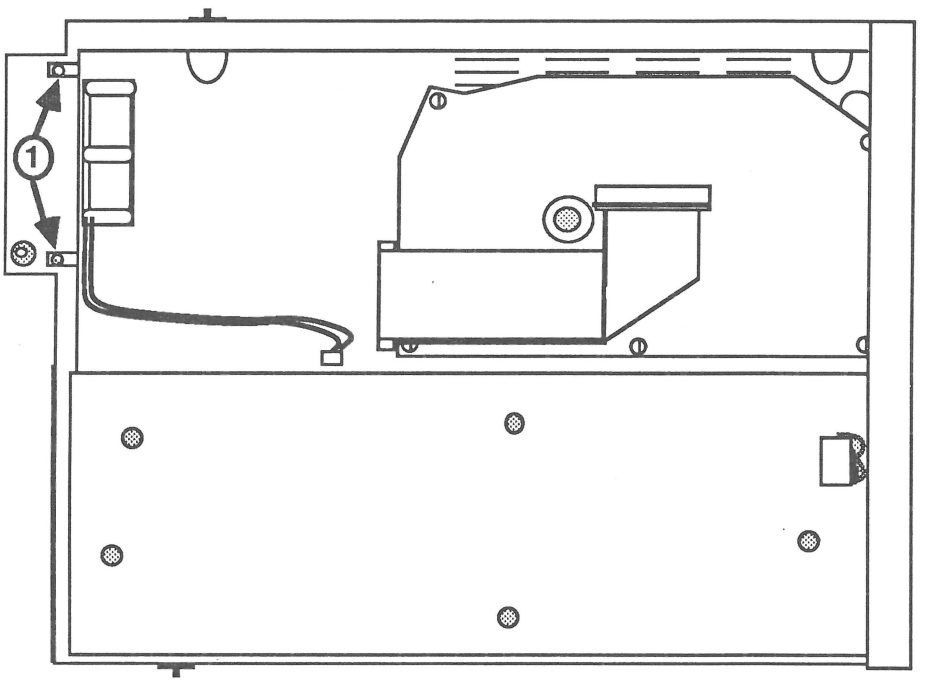


**FIGURE 5**

## REMOVE AND REPLACE BOTTOM SHIELD

### Remove

1. Remove the top cover.
2. Remove the controller board.
3. Remove the two screws (see Figure 5, #1).
4. Gently tilt and lift the bottom shield (with the power supply and hard disk attached) out of the plastic case.

### Replace

1. Gently position and place the bottom shield (with the power supply and hard disk attached) into the plastic case.
2. Replace the two screws (see Figure 5, #1).
3. Replace the controller board.
4. Replace the top cover.

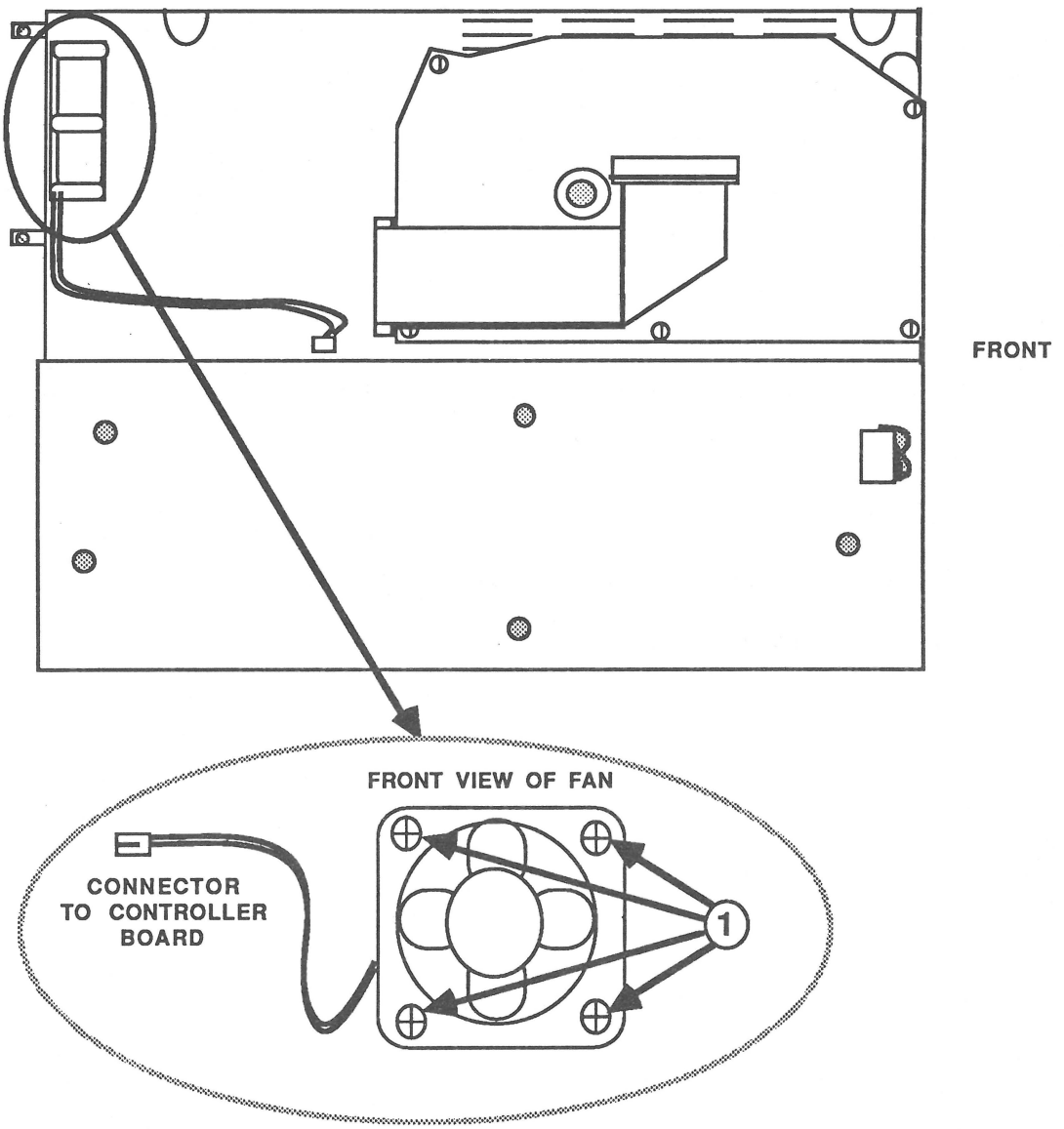


**FIGURE 6**

## REMOVE AND REPLACE THE FAN

### Remove

1. Remove the top cover.
2. Remove the controller board.
3. Remove the bottom shield.
4. Remove the four screws holding the fan in place (see Figure 6, #1).
5. Remove the fan.

### Replace

1. Position the fan so that the air flow arrow embossed on the side of the fan is pointing to the rear of the machine and the rotation arrow embossed on the side of the fan is pointing up.
2. Replace the four screws (see Figure 6, #1).
3. Replace the bottom shield.
4. Replace the controller board.
5. Replace the top cover.

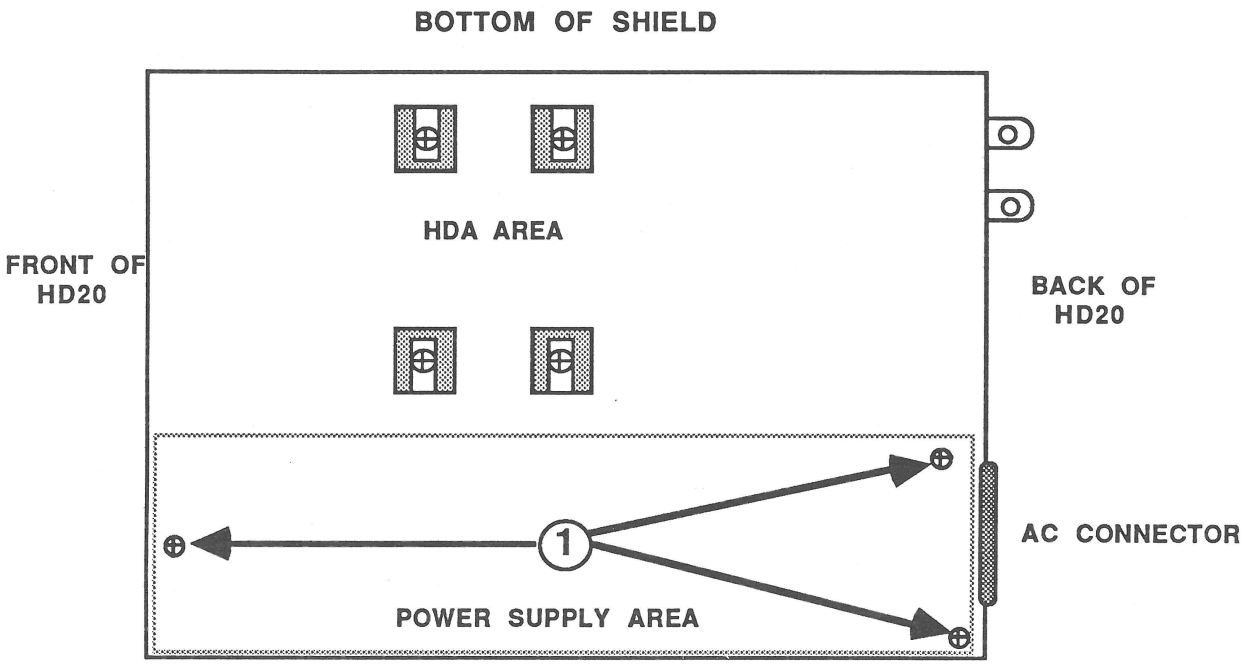
BOTTOM OF SHIELD
HDA AREA
FRONT OF HD20
BACK OF HD20
AC CONNECTOR
1
POWER SUPPLY AREA

FIGURE 7

## REMOVE AND REPLACE THE POWER SUPPLY

### Remove

1. Remove the top cover.
2. Remove the controller board.
3. Remove the bottom shield with the hard disk and power supply from the plastic case.
4. Gently place the bottom shield upside down.
5. Remove the three screws (see Figure 7, #1).
6. Remove the power supply.

### Replace

1. Position the power supply so that the screw holes line up.
2. Replace the three screws (see Figure 7, #1).
3. Replace the bottom shield with the hard disk and power supply into the plastic case.
4. Replace the controller board.
5. Replace the top cover.

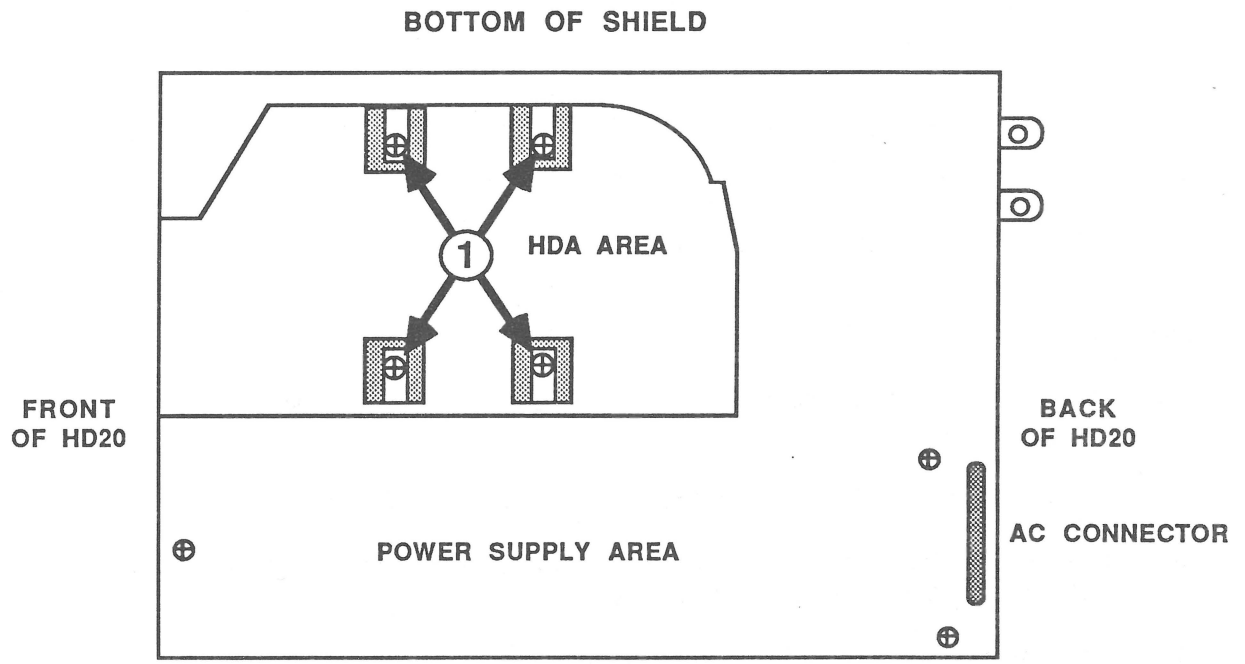
BOTTOM OF SHIELD
1
HDA AREA
FRONT
OF HD20
BACK
OF HD20
POWER SUPPLY AREA
AC CONNECTOR

**FIGURE 8**

## REMOVE AND REPLACE THE HARD DISK ASSEMBLY

### Remove

1. Remove the top cover.
2. Remove the controller board.
3. Remove the bottom shield (with the hard disk and power supply attached) from the plastic case.
4. Gently place the bottom shield upside down.

**CAUTION** The interface cable from the controller board to the hard disk is not a standard ribbon cable. Do not substituite a different ribbon cable for this connection. Replace only with the specified cable from the parts list. Failure to do this can result in serious damage to the hard disk and/or controller board.

5. Remove the interface cable.
6. Remove the four screws (see Figure 8, #1).
7. Remove the hard disk assembly.

### Replace

1. Position the hard disk assembly so the screw holes line up with the bottom shield.
2. Replace the four screws (see Figure 8, #1).
3. Connect the interface cable to the hard disk assembly.
4. Replace the bottom shield (with the hard disk and power supply attached) into the the plastic case.
5. Replace the controller board.
6. Replace the top cover.

Apple Technical Procedures

# Hard Disk 20

## Illustrated Parts List

## ❑ CONTENTS

IPL.3 Hard Disk 20 Assembly (Figure 1)

The figures and lists in this section include all piece parts that can be purchased separately from Apple for the Hard Disk 20, along with their part numbers. These are the only parts available from Apple. Refer to your *Apple Service Programs* manual for prices.

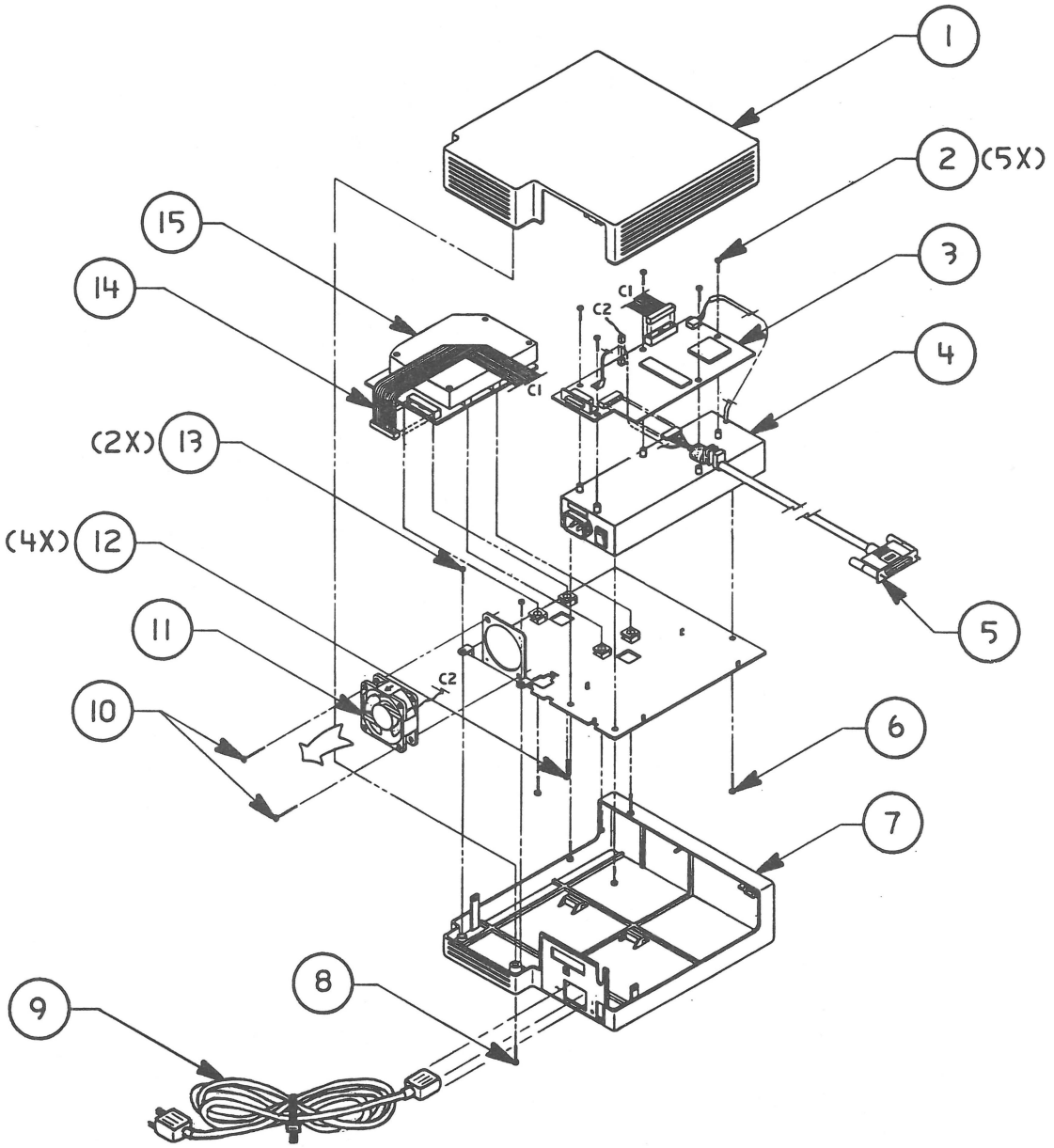


**FIGURE 1**

## ❑ HARD DISK 20 ASSEMBLY (Figure 1)

| Item | Part No. | Description |
|---|---|---|
| 1 | 810-0377 | Top Cover |
| 2 | 410-1306 | Screw (controller + lug) |
| 3 | 661-0300 | HD 20 Controller Board |
| 4 | 661-0301 | HD 20 Power Supply |
| 5 | 590-0324 | Cable, HD 20 to Macintosh |
| 6 | 415-3306 | Screw (power supply) |
| 7 | 630-5193 | Bottom Cover |
| 8 | 426-1007 | Screw (case) |
| 9 | 590-0260 | Cable, Power |
| 10 | 462-3103 | Screw (fan) |
| 11 | 720-5001 | Fan |
| 12 | 440-6105 | Screw (Rodime) |
| 13 | 462-4100 | Screw (chassis to plastic) |
| 14 | 590-0336 | Cable, HDA to Controller |
| 15 | 661-0302 | HDA, 20 MB, with Analog Board |

Apple Technical Procedures

# Apple PC 5.25 Drive

## Technical Procedures

## ❑ TABLE OF CONTENTS


| | | |
|---|---|---|
| **Section 1 – Basics** | 1.2 | Product Description |
| | 1.2 | Connecting the Drive |
| **Section 2 – Take-Apart** | 2.2 | Case |
| | 2.4 | Shield Cover and Cable |
| | 2.6 | Mechanical Assembly |
| **Section 3 – Diagnostics** | 3.2 | Introduction |
| | 3.2 | Using MacTest SE |
| | 3.2 | Materials Required |
| | 3.2 | Procedure |
| | 3.4 | Using MacTest II/IIx |
| | 3.4 | Materials Required |
| | 3.4 | Procedure |
| **Section 4 – Troubleshooting** | 4.2 | Using the Flowchart |
| | 4.2 | Troubleshooting Flowchart |
| **Illustrated Parts List** | IPL.3 | Finished Goods Assembly (Figure 1) |

©Apple Computer, Inc., 1987-1990. No portion of this document may be reproduced in any form without the written permission of Apple Computer, Inc.

MacTest is a trademark of Apple Computer, Inc.

Macintosh, Apple, and the Apple logo are registered trademarks of Apple Computer, Inc.

MS-DOS is a registered trademark of Microsoft Corporation.

Apple Technical Procedures

# Apple PC 5.25 Drive

## Section 1 – Basics

## ❑ CONTENTS


1.2 Product Description
1.2 Connecting the Drive

## ❑ PRODUCT DESCRIPTION

The Apple® PC 5.25 Drive may be used with a Macintosh® SE, II, IIx, or IIcx (but **not** IIci or SE/30) to transfer data between 5.25-inch MS-DOS®-formatted disks and 3.5-inch Macintosh-formatted disks. The following additional equipment (sold separately) is required:

- A file transfer program such as *Apple File Exchange.*

***IMPORTANT:*** *Apple File Exchange is a standard utility in the current system software. Apple File Exchange will support only one PC Drive per Macintosh computer.*

- One of the following controller cards:
  - Macintosh SE-Bus PC Card, the MS-DOS disk drive controller for the Macintosh SE.

    ***Note:*** The Macintosh SE-Bus PC Card cannot be used in the Macintosh SE/30.
  - Macintosh II PC Drive Card, the MS-DOS disk drive controller for the Macintosh II.

    ***Note:*** The Macintosh II PC Drive Card is not recommended for use in the Macintosh IIci.
  - A third-party expansion card that is designed to operate with the Apple PC 5.25 Drive.

### Connecting the Drive

The Apple PC 5.25 Drive cable plugs into a DB-37 connector on the disk drive controller card.

For the Macintosh SE, install the controller card as described in Section 1, SE-Bus PC Card, of the *Macintosh Family Cards Technical Procedures.* Then plug the Apple PC 5.25 Drive cable into the new DB-37 connector in the expansion port.

For the Macintosh II, install the controller card as described in the owner's manual. Then plug the Apple PC 5.25 Drive cable into the new DB-37 connector at the back of the Macintosh II.

Apple Technical Procedures

# Apple PC 5.25 Drive

## Section 2 – Take-Apart

### ❑ CONTENTS


2.2 Case
2.4 Shield Cover and Cable
2.6 Mechanical Assembly

## ❑ CASE

**Materials Required**

#2 Phillips screwdriver
Flatblade screwdriver

**Remove**

1. Use a flatblade screwdriver to carefully pry the disk insertion lever away from the disk drive (see Figure 1).

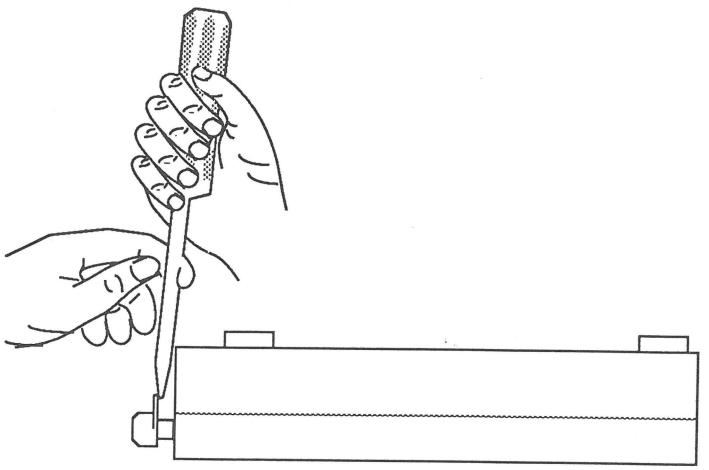

**FIGURE 1**

2. Turn the disk drive upside down.

3. Remove the six Phillips screws (Figure 2, #1 and #2).

4. Hold the case together and turn the disk drive over.

5. Holding onto the bottom cover, lift the back of the top cover. Pull it slightly forward and up until it clears the interior parts of the drive.

6. Slip the cable out of the slot in the rear of the bottom cover, and remove the disk drive.

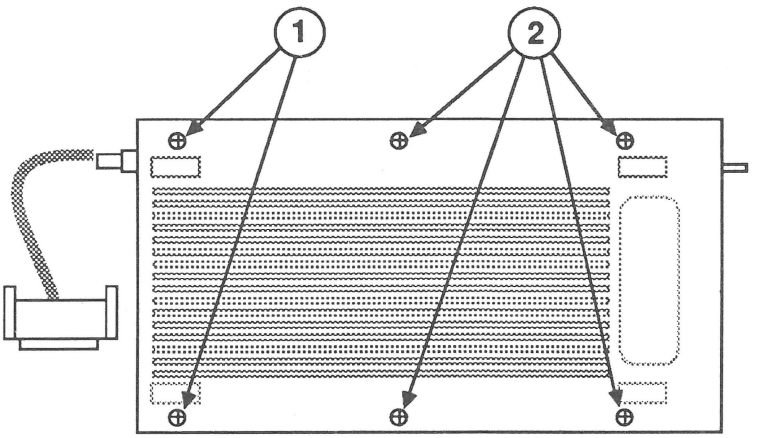


**FIGURE 2**

**Replace**

1. Place the disk drive in the bottom cover. Carefully route the cable behind the drive and out of the case. The cable grommet should be seated in the cutout in the case (see Figure 3).

2. Fit the hole in the top cover over the disk lever post, and fit the top cover onto the base.

3. Hold the case together and turn it over.

4. Replace the two longer 5/8-inch Phillips screws (Figure 2, #1) and the four 5/16-inch Phillips screws (Figure 2, #2) in the case bottom.

5. Push the disk insertion lever onto its post.

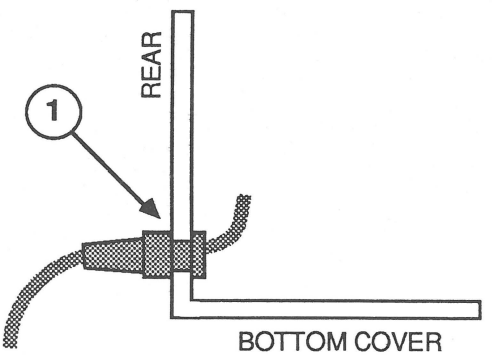


**FIGURE 3**

## ❑ SHIELD COVER AND CABLE

**Materials Required**

#2 Phillips screwdriver

**Remove**

1. Remove the case.

2. Remove the two Phillips screws (Figure 4, #1) that secure the shield cover to the shield case.

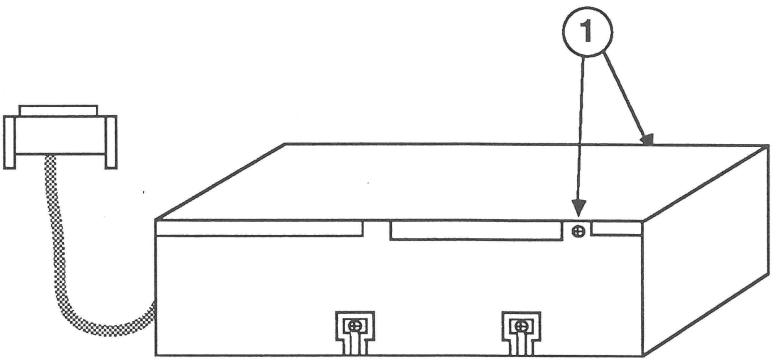


**FIGURE 4**

3. From the front of the drive, lift the shield cover up and back; then set it aside.

4. Remove the Phillips screw (Figure 5, #1) that secures the cable ground strap to the shield case.

5. Disconnect the cable bus connector from J1 (Figure 5, #2) and the cable power connector from J2 (Figure 5, #3).

**Replace**

1. Connect the cable bus connector to J1 (Figure 5, #2) and the cable power connector to J2 (Figure 5, #3).

2. Replace the Phillips screw that secures the cable ground strap to the shield case.

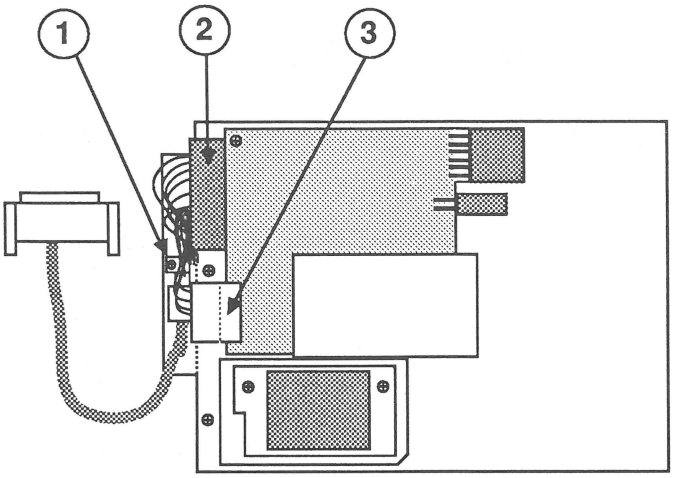


**FIGURE 5**

3. Align retaining tabs at back of shield cover with cutouts in the shield case (Figure 6, #1), and snap the shield cover into place.

4. Replace the two Phillips screws that secure the shield cover.

5. Replace the case.

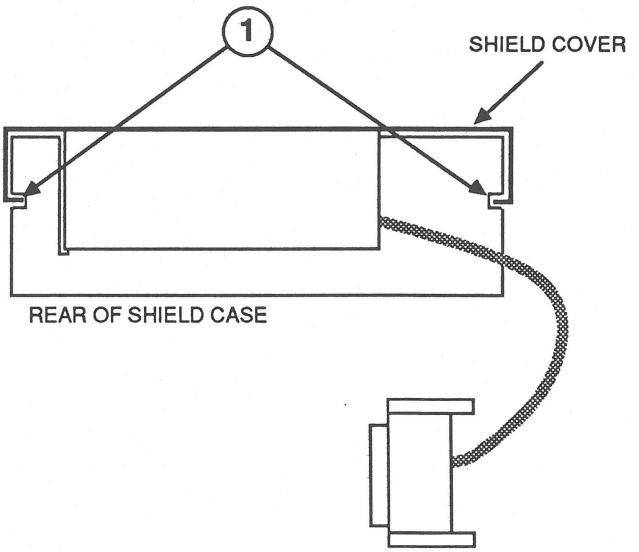


**FIGURE 6**

## ❑ MECHANICAL ASSEMBLY

**Materials Required**

#2 Phillips screwdriver

**Remove**

1. Remove the case.
2. Remove the shield cover and cable.
3. Remove the four Phillips screws (Figure 7, #1).
4. Lift the mechanical assembly from the shield case.

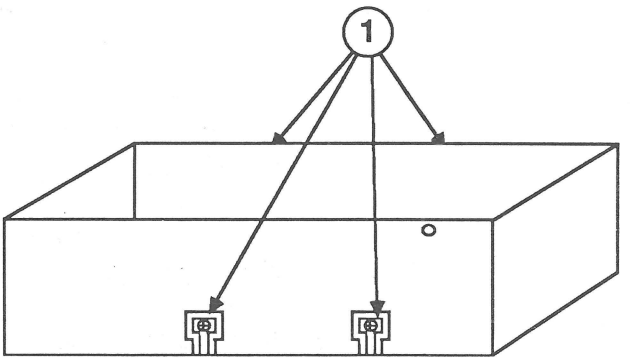


**FIGURE 7**

**Replace**

1. Place the mechanical assembly back in the shield case.

2. Replace the four Phillips screws (Figure 7, #1) that secure the mechanical assembly.

3. Replace the shield cover and cable.

4. Replace the case.

Apple Technical Procedures

# Apple PC 5.25 Drive

## Section 3 – Diagnostics

## ❑ CONTENTS


3.2 Introduction
3.2 Using MacTest SE
3.2 Materials Required
3.2 Procedure
3.4 Using MacTest II/IIx
3.4 Materials Required
3.4 Procedure

## ❑ INTRODUCTION

The *MacTest™ SE* and *MacTest™ II/IIx* programs test an Apple PC 5.25 Drive and an Apple disk drive controller card at the same time. If the system you are testing uses a non-Apple disk drive controller card, replace it with an Apple card before testing.

## ❑ USING MACTEST SE

**Materials Required**

*MacTest SE* disk
Macintosh SE
Known-good Macintosh SE-Bus PC Card
Known-good Apple PC 5.25 Drive
Double-sided, double-density 5.25-inch disk with a minimum of 48 tracks per inch

**Procedure**

*MacTest SE* tests the Apple PC 5.25 Drive, the Macintosh SE-Bus PC Card, and the expansion port on the Macintosh SE logic board.

1. If you are not using a known-good Macintosh SE to test the Apple PC 5.25 Drive and the Macintosh SE-Bus PC Card, start up *MacTest SE* and run the logic and drive tests. (See "Starting MacTest SE and MacTest SE/30" in Section 4, Diagnostics, of the *Macintosh SE and Macintosh SE/30 Technical Procedures*.)

   If a Macintosh SE-Bus PC Card is installed, and if *MacTest SE* will not run, remove the card and retest. If all tests pass after the Macintosh SE-Bus PC Card is removed, replace the card.

   If any test fails after the card is removed, repair the Macintosh SE, retest to verify that you have a known-good Macintosh SE, and reinstall the card.

2. If the Macintosh SE-Bus PC Card and Apple PC 5.25 Drive are not installed, turn off the power and install the Macintosh SE-Bus PC Card and the Apple PC 5.25 Drive. The installation instructions for the Macintosh SE-Bus PC Card are in Section 1, SE-Bus PC Card, of the *Macintosh Family Cards Technical Procedures*.

   After the card is installed, the Apple PC 5.25 Drive cable plugs into the expansion port at the back of the Macintosh SE.

3. Insert the *MacTest SE* disk into drive 1 (the lower drive) on the Macintosh SE, and turn the power on to start up *MacTest SE*. (For *MacTest SE* operating instructions, see Section 4, Diagnostics, of the *Macintosh SE and Macintosh SE/30 Technical Procedures*.)

4. Pull down the Options menu and select **Test Selections**. Click on the Apple PC 5.25 Drive check box until an **X** appears in the check box. (You may want to turn off all other tests to reduce testing time.) Then click **OK**.

5. Insert a 5.25-inch disk in the Apple PC 5.25 Drive.

***CAUTION:*** MacTest SE *formats the disk during testing. The disk does not need to be formatted or blank. Any data on the disk will be erased.*

6. Click **Start**.

   *MacTest SE* will run until the test is complete, or until *MacTest SE* detects a failure.

   If the test passes, a message is displayed in the lower portion of the *MacTest SE* window.

   If the test fails, *MacTest SE* displays a window with troubleshooting instructions. For additional information, see Section 4, Troubleshooting.

***IMPORTANT:*** *The Apple PC 5.25 Drive test cannot always determine which module caused a test to fail. If the test reports that the drive and card are bad, replace one module at a time as described in the Troubleshooting Flowchart in Section 4, Troubleshooting.*

## ❑ USING MACTEST II/IIx

**Materials Required**

The following **known-good** equipment:

*MacTest II/IIx* disk
Macintosh II or Macintosh IIx
Macintosh II PC Drive Card
Apple PC 5.25 Drive
Double-sided, double-density 5.25-inch disk with a minimum of 48 tracks per inch

**Procedure**

*MacTest II/IIx* tests the Apple PC 5.25 Drive, the Macintosh II PC Drive Card, and the expansion slot on the Macintosh II or Macintosh IIx logic board.

***IMPORTANT:*** *Only one Macintosh II PC Drive Card can be tested at a time. Do not install more than one card.*

1. If you are **not** using a known-good Macintosh II or Macintosh IIx to test the Macintosh II PC Drive Card, start up *MacTest II/IIx* and run the logic, drive, and video card tests. (See "Running MacTest II/IIx" in Section 3, Diagnostics, of the *Macintosh II and Macintosh IIx Technical Procedures.*) Complete any needed repairs before you continue.

2. Switch the Macintosh II or Macintosh IIx off, put on your grounded wriststrap, and install the Macintosh II PC Drive Card and the Apple PC 5.25 Drive.

3. Insert the *MacTest II/IIx* disk into drive 1 (the drive on the right) on the Macintosh II or Macintosh IIx, and turn the power on to start up *MacTest II/IIx*. (For *MacTest II/IIx* operating instructions, see Section 3, Diagnostics, of the *Macintosh II and Macintosh IIx Technical Procedures.*)

4. Pull down the Options menu and select **Test Selections**. Click on the Apple PC 5.25 Drive check box until an **X** appears in the check box. (You may want to turn off all other tests to reduce testing time.) Then click **OK**.

5. Insert a 5.25-inch disk in the Apple PC 5.25 Drive.

***CAUTION:*** MacTest II/IIx *formats the disk during testing. The disk does not need to be formatted or blank. Any data on the disk will be erased.*

6. Click **Start**.

***CAUTION:*** *Do not open the disk drive door during testing. Opening the door while testing can damage the disk and cause* MacTest II/IIx *to hang the Macintosh.*

*MacTest II/IIx* will run until the test is complete or until *MacTest II/IIx* detects a failure.

If the test passes, a message appears in the lower portion of the *MacTest II/IIx* window.

If the test fails, *MacTest II/IIx* displays a window with troubleshooting instructions. For additional information, see Section 4, Troubleshooting.

***IMPORTANT:*** *The Apple PC 5.25 Drive test cannot always determine which module caused a test to fail. If the test reports that the drive and card are bad, replace one module at a time as described in the Troubleshooting Flowchart in Section 4, Troubleshooting.*

Apple Technical Procedures

# Apple FDHD/SuperDrive

## Technical Procedures

## ❑ TABLE OF CONTENTS


| | | |
|---|---|---|
| **Section 1 – Basics** | 1.2 | Product Description |
| | 1.2 | Introduction |
| | 1.2 | Features |
| | 1.3 | Identification |
| | 1.5 | Product Requirements |
| | 1.5 | System Requirements |
| | 1.6 | Software and Media Requirements |
| | 1.7 | Using the Product |
| | 1.7 | Connecting the FDHD/SuperDrive |
| | 1.8 | Drive and Media Compatibility |
| | 1.9 | Initialization |
| | 1.9 | Inserting and Ejecting Disks |
| | 1.10 | Drive Mechanism Packaging |
| **Section 2 – Take-Apart** | 2.2 | Case |
| | 2.9 | External Drive Cable and Shield |
| | 2.12 | Daisy Chain Interface Board |
| | 2.14 | 1.4 MB Drive Mechanism |
| | 2.18 | Eject Switch Assembly |
| | 2.19 | LED Assembly |
| **Section 3 – Diagnostics** | (Refer to the appropriate *Macintosh Family Technical Procedures*) | |
| **Section 4 – Troubleshooting** | 4.2 | Using the Apple FDHD/SuperDrive Symptom Chart |
| | 4.3 | Apple FDHD/SuperDrive Symptom Chart |
| **Illustrated Parts List** | IPL.3 | Finished-Goods Assembly |
| | IPL.5 | Service Packaging, 800K/1.4 MB Drives |


***Note:*** The Apple FDHD Drive is now called the Apple FDHD/SuperDrive™. Use of either name in the following procedures refers to the same product.

©Apple Computer, Inc., 1986-1989. No portion of this document may be reproduced in any form without the written permission of Apple Computer, Inc.

FDHD and SuperDrive are trademarks of Apple Computer, Inc.

Macintosh, Apple, Apple IIGS, and the Apple logo are registered trademarks of Apple Computer, Inc.

Apple Technical Procedures

# Apple FDHD Drive

## Section 1 – Basics

### ❑ CONTENTS


1.2 Product Description
1.2 Introduction
1.2 Features
1.3 Identification
1.5 Product Requirements
1.5 System Requirements
1.6 Software and Media Requirements
1.7 Using the Product
1.7 Connecting the FDHD Drive
1.8 Drive and Media Compatibility
1.9 Initialization
1.9 Inserting and Ejecting Disks
1.10 Drive Mechanism Packaging

## ❑ PRODUCT DESCRIPTION

### Introduction

The Apple® FDHD™ Drive (Floppy Disk High Density) is a stand-alone external data storage and retrieval system that can record up to 1.4 megabytes of data on special high-density (HD), 3.5-inch disks. When used with the Apple File Exchange Utility (version 1.1 or later), the FDHD drive can also provide quick and easy data exchangeability between Macintosh and MS-DOS computers. The FDHD is also fully backward compatible with the current Apple 400K and 800K disk formats.

### Features

The Apple FDHD Drive is similar to Apple's 800K drives but has the following additional features:

- Formats HD disks, and stores up to 1.4 MB of data
- Reads and writes Apple 400K and 800K data disks (backward compatible)
- Reads and writes MS-DOS-formatted, 3.5-inch 720K and 1.4 MB data disks
- Formats 720K and HD disks for use in MS-DOS computers
- Formats 400K and 800K disks for use in 400K and 800K disk drives

  ***Note:*** You should not, however, use HD disks in 400K or 800K disk drives. The magnetic characteristics of HD disks prevent 400K and 800K drives from reliably reading and writing information on an HD disk, and also prevent these drives from properly initializing HD disks for use in an FDHD drive.

- Transfers data between Macintosh and MS-DOS computers

## Identification

The Apple FDHD Drive looks like the Apple 3.5 Drive and other Apple 800K drives. You can identify an FDHD external drive by checking the external case for the following distinguishing features:

1. Check the front of the case; **FDHD** (Figure 1, #1) has been added to all FDHD external drive cases.

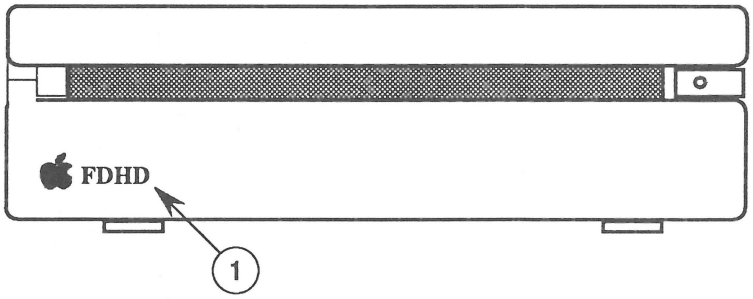


**FIGURE 1**

2. Check the product label (Figure 2, #1) on the bottom of the case; **Apple FDHD** appears on all FDHD external drive cases.

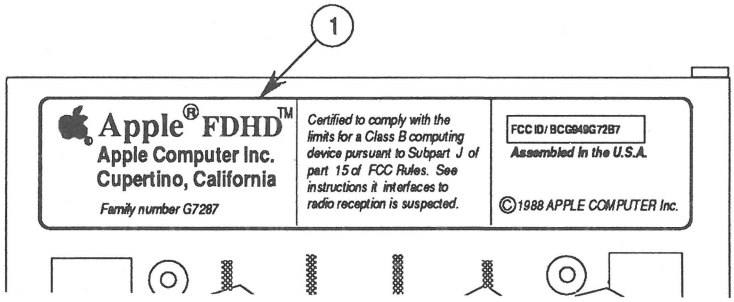


**FIGURE 2**

## *Identifying the FDHD Mechanism*

If the FDHD drive mechanism has been removed from the external case, you can distinguish the FDHD mechanism from Macintosh 800K internal and external drive mechanisms in the following ways:

1. Check the color of the label on the side of the drive mechanism itself:

| | |
|---|---|
| • Apple 3.5 Drive | RED on silver |
| • All other Apple 800K drives | BLACK on silver |
| • **Apple FDHD Drive** | **BLUE on silver** |

2. Check the manufacturer's label (Figure 3, #1) on the bottom of the drive mechanism; **2MB** has been added to the label on all high-density drives.

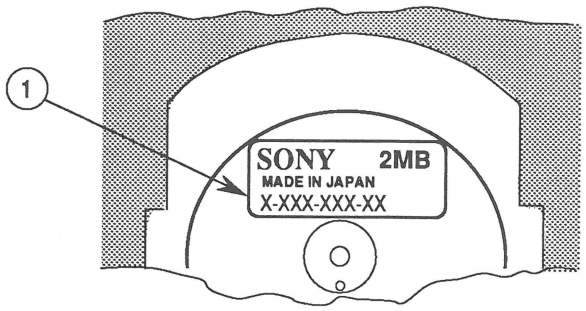


**FIGURE 3**

3. Check the serial number on the label:

| | |
|---|---|
| • Internal Macintosh 800K Drive | Series 51W |
| • External Macintosh 800K Drive | Series 51W-10 |
| • Apple 3.5 Drive | Series 51W-03 |
| • **Apple FDHD Drive** | **Series 75W-01** |
| | **Series 75W-11** |

4. Check the microswitches located at the front of the drive. **The FDHD has three microswitches** (Figure 4, #1) aligned perpendicular to the front edge of the drive. The 400K and 800K drives have only two microswitches (Figure 4, #2) aligned parallel to the front edge of the drive.

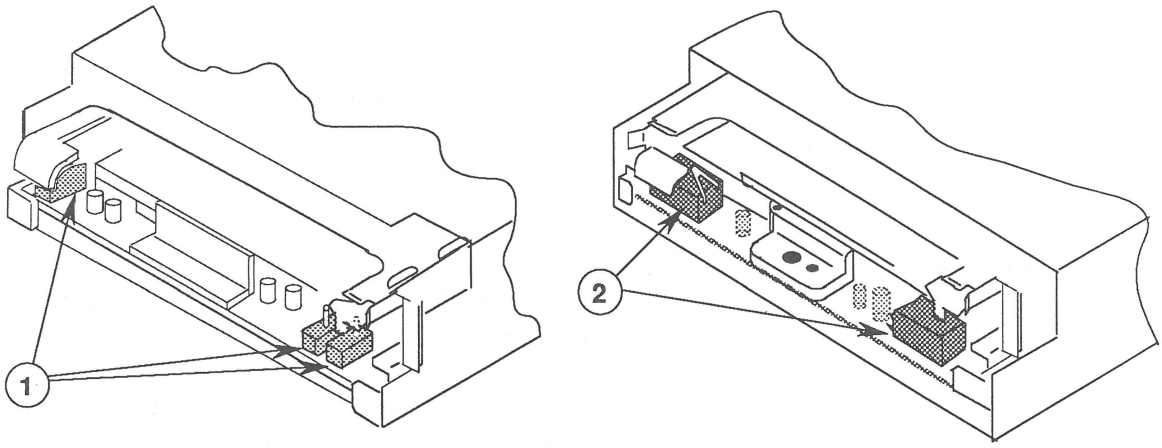


1.4 MB 800K

**FIGURE 4**

## ❑ PRODUCT REQUIREMENTS

**System Requirements**

The Apple FDHD Drive can be used on any Macintosh computer that has a disk drive port on the rear panel, and whose logic board has the appropriate disk controller circuitry (upgraded ROM and the SWIM disk controller chip). At present, the FDHD external drive can be used with the following systems:

- Macintosh SE/30
- Macintosh IIcx

Because the Macintosh SE/30 and Macintosh IIcx systems come standard with an internal FDHD drive, these systems include the FDHD disk controller circuitry needed to add an FDHD external drive.

*Revised ROM*

The new 512K ROMs (permanent, Read-Only Memory) include code that supports the FDHD disk drive and SWIM disk controller chip.

*SWIM Disk Controller*

Like the IWM chip that it replaces, the SWIM chip controls reading and writing operations between the CPU and the internal and external disk drives. In addition, the SWIM chip reads and writes data disks formatted on both GCR (Apple's variable rotational speed format) and MFM (a constant rotational speed format used in MS-DOS systems) disk drives. This enables the FDHD external drive to exchange data between Macintosh and MS-DOS systems.

## Software and Media Requirements

To take full advantage of the Apple FDHD Drive, you need the following:

- System file version 6.0 or later
- HD (high-density) disks
- Apple File Exchange utility, version 1.1 or later

***CAUTION:*** *High-density media are more likely to have problems than low-density media. To avoid media-related problems, use only known-good media or high-density media bearing the Apple label.*

You will not be able to take advantage of the features of the FDHD drive by using any System file older than version 6.0. Also, although the FDHD drive can read, write, and format 400K and 800K data disks, you cannot take advantage of the high data storage capability of the FDHD drive unless you use special HD disks. To avoid media-related problems, Apple advises using HD media bearing the Apple label with the FDHD disk drive.

The Apple File Exchange utility is necessary both to format disks for use on MS-DOS computers and to work directly with information on disks formatted from MS-DOS computers. When using the Apple File Exchange utility, remember always to open the AFE utility before inserting the MS-DOS disk that you intend to read or format.

### *Identifying HD Disks*

To distinguish between HD disks and other 3.5-inch disks, check the label. The Apple label has **HD** stamped on the plastic case (Figure 5, #1) and **High Density** stamped on the metal shutter (Figure 5, #2). In addition, all HD disks have a second read/write window, located in the upper left corner of the disk (Figure 5, #3).

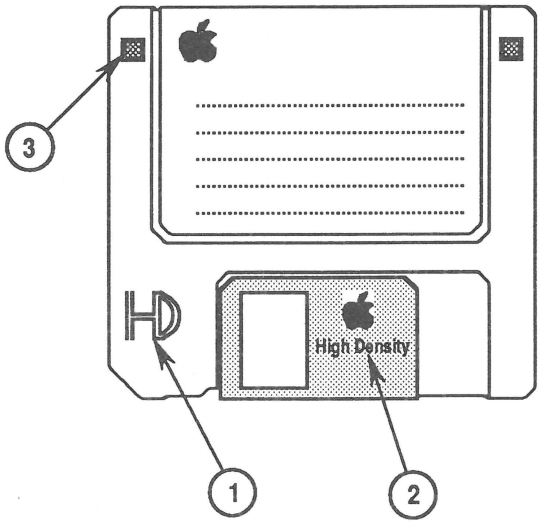


**FIGURE 5**

## ❑ USING THE PRODUCT

### Connecting the FDHD Drive

To use the Apple FDHD Drive with properly configured Macintosh systems, simply connect the FDHD drive cable to the disk drive port on the rear panel of the computer. *If users are experiencing electromagnetic interference problems with the FDHD external drive, remind them to position the drive to the right of the computer*, allowing at least two inches between the drive and the computer. Positioning the drive in this way will help avoid interference problems caused by power supplies, which are located on the left side of the computer and of most monitors.

## Drive and Media Compatibility

As shown in the drive and media compatibility matrix below (Figure 6), **400K drives** can read, write, and format single-sided media and double-sided media (in 400K format only). The **800K drives** can also read, write, and format single- and double-sided media. However, **Apple does not recommend using high-density media in either 400K or 800K disk drives.** Data saved to high-density media using 400K or 800K drives is unreliable and could be lost later. **FDHD drives** can read, write, and format single-sided, double-sided, and high-density media. In addition, FDHD drives can read and write 720K, double-sided MFM format media (for MS-DOS systems).

**DRIVE AND MEDIA COMPATIBILITY MATRIX**

| Drive | Media | | |
|---|---|---|---|
| | Single-Sided | Double-Sided | High Density |
| 400K | R/W/F | R/W/F (400K format only) | N R |
| 800K | R/W/F | R/W/F | N R |
| 1.4 MB | R/W/F | R/W/F (800K Apple) | R/W/F (Apple or IBM) |
| | | R/W/F (720K IBM)* | |

**LEGEND:**
R = Read
W = Write
F = Format
NR = Not Recommended
IBM = MS-DOS or OS/2 format

*The Apple File Exchange utility is required to format double-sided disks for MS-DOS or OS/2 systems

**FIGURE 6**

***Note:*** To help understand drive and media format compatibility, try thinking in terms of the drive/media of lowest capacity. For example, if your system has both an 800K drive and an FDHD drive, to ensure media format compatibility between the two drives you must use 800K media (the drive and media of lowest capacity).

## Initialization

The Apple FDHD Drive can initialize single- and double-sided GCR format (Apple) media, double-sided 720K MFM format media (MS-DOS), and HD media. The Apple File Exchange utility is required to initialize both 720K and HD disks for use in MS-DOS computers.

### *Formatting 400K, 800K, and HD Apple disks*

The Apple FDHD Drive can differentiate between 400K/800K and HD media. When you insert a blank, unformatted 400K or 800K disk into the drive, the Macintosh will ask if you wish to initialize the disk as single or double sided. (If you are going to be using an 800K disk in a 400K drive as well as in the Apple FDHD Drive, you will have to initialize the disk as single sided—otherwise the 400K drive will not be able to read it.) When you insert a blank, unformatted HD disk into the FDHD drive, simply click Initialize and follow the on-screen instructions.

### *Formatting 720K and HD MS-DOS disks*

To initialize a blank and unformatted 720K double-sided disk, or an HD disk for use in an MS-DOS system, first open the Apple File Exchange utility (version 1.1 or later). When you insert the unformatted disk, you will see the Apple File Exchange dialog box for either HD disks or 800K/720K disks. After clicking in the appropriate box, you will be shown a dialog box with an MS-DOS option. Click in the MS-DOS box, and follow MS-DOS naming conventions to complete the initialization process.

## Inserting and Ejecting Disks

The Apple FDHD Drive has an automatic disk insert and eject system. The insert cycle starts when the disk is partially inserted into the drive, triggering a loaded spring that completes the cycle automatically. The eject cycle works only when the drive is under power, and is controlled by using a software command.

***Note:*** When the Apple FDHD Drive is connected to a Macintosh, the eject button on the front of the drive is automatically deactivated because Macintosh software controls disk ejection.

## Cleaning the Drive

To clean the Apple FDHD Drive, use the 3M 3.5 Inch Head Cleaning Diskette Kit (model 40263) and follow the enclosed directions. Do not attempt to clean the drive in any other manner. You could damage the drive.

***Note:*** For cleaning products other than the 400K drive found in the 128K and 512K Macintosh, it is important to remove and discard the plastic film tab from the cleaning disk's head access slot.

If the dust build-up is considerable, remove the drive mechanism from the carrier and use a moisture-free "canned air" product to blow the dust away from the drive slot. See Figure 7.

***CAUTION:*** *Never point the spray directly at the drive head (Figure 7, #1). Spraying the head could damage the head gimble. Also, be sure to clear the track-zero sensor (Figure 7, #2) when spraying. This sensor must be kept clear of dust.*

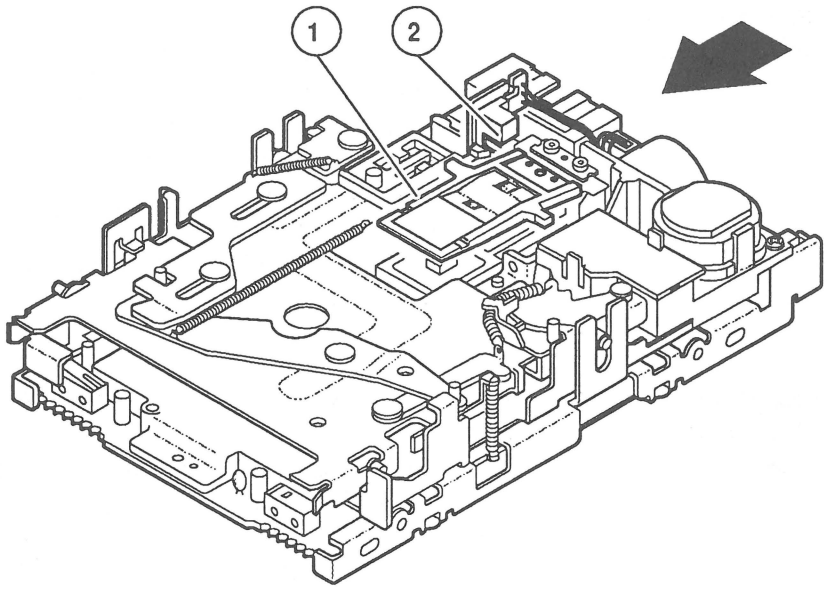


**FIGURE 7**

## Drive Mechanism Packaging

When sending the FDHD drive mechanism to Apple for exchange, it **must** be shipped in the **Apple-approved shipping fixture**. Be sure to **remove the inner metal shield** before returning the drive mechanism to Apple. Save the inner metal shield and install it on the replacement drive mechanism. Refer to the Illustrated Parts List for additional packaging information.

Apple Technical Procedures

# Apple FDHD Drive

## Section 2 – Take-Apart

## ❑ CONTENTS


2.2 Case
2.9 External Drive Cable and Shield
2.12 Daisy Chain Interface Board
2.14 1.4 MB Drive Mechanism
2.18 Eject Switch Assembly
2.19 LED Assembly


***Note:*** If a step is underlined, detailed instructions for that step can be found elsewhere in this section.

## ❑ CASE

**Materials Required**

Small Phillips screwdriver
Needlenose pliers

**Remove**

To remove the case:

1. Place the Apple FDHD Drive upside down on a padded surface.

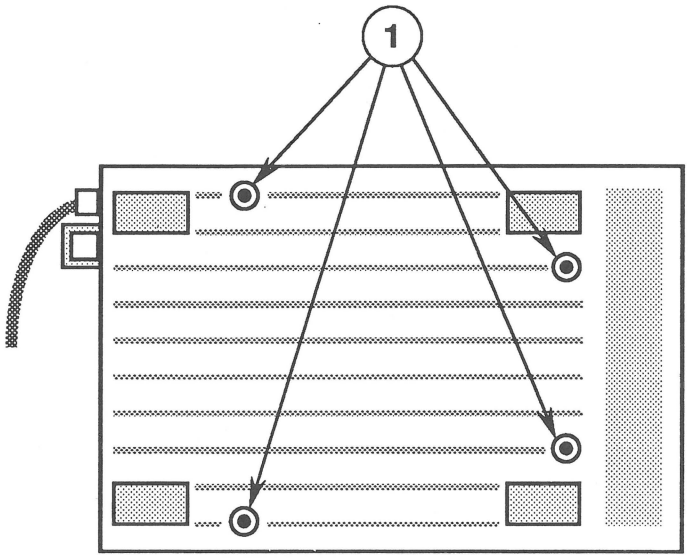


**FIGURE 1**

2. Remove the four screws from the case bottom (Figure 1, #1).

3. Pull the case bottom (Figure 2, #1) off the rubber, external drive cable anchor (Figure 2, #2).

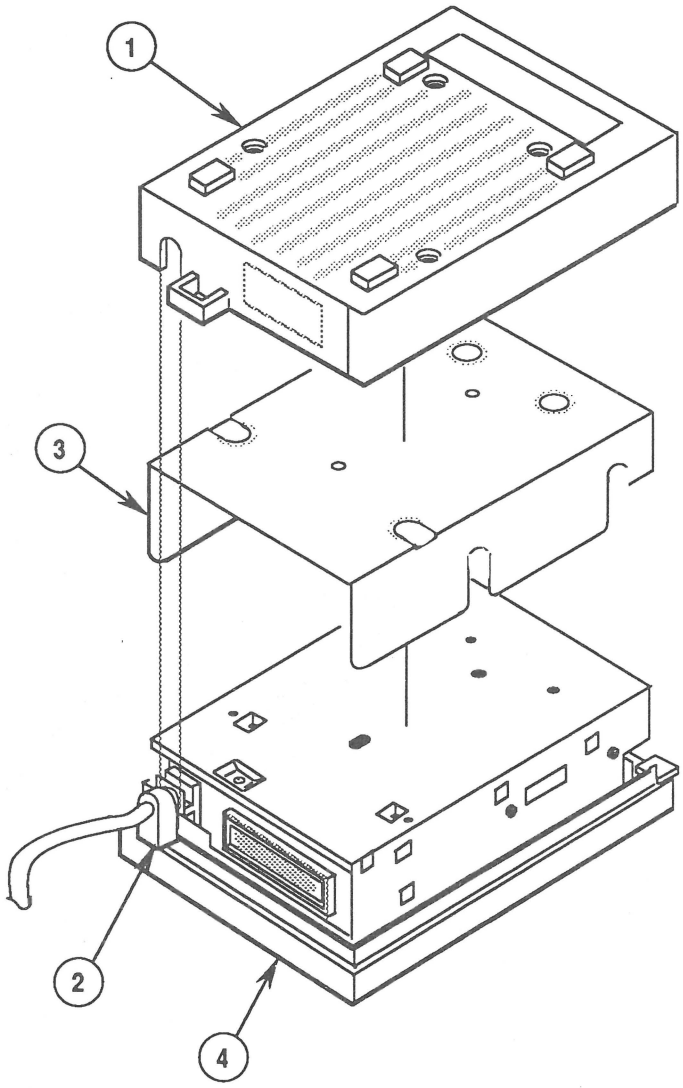


**FIGURE 2**

4. Remove the floppy metal shield (Figure 2, #3) from the drive assembly.

5. Pull the rubber, external drive cable anchor (Figure 2, #2) off the case top (Figure 2, #4).

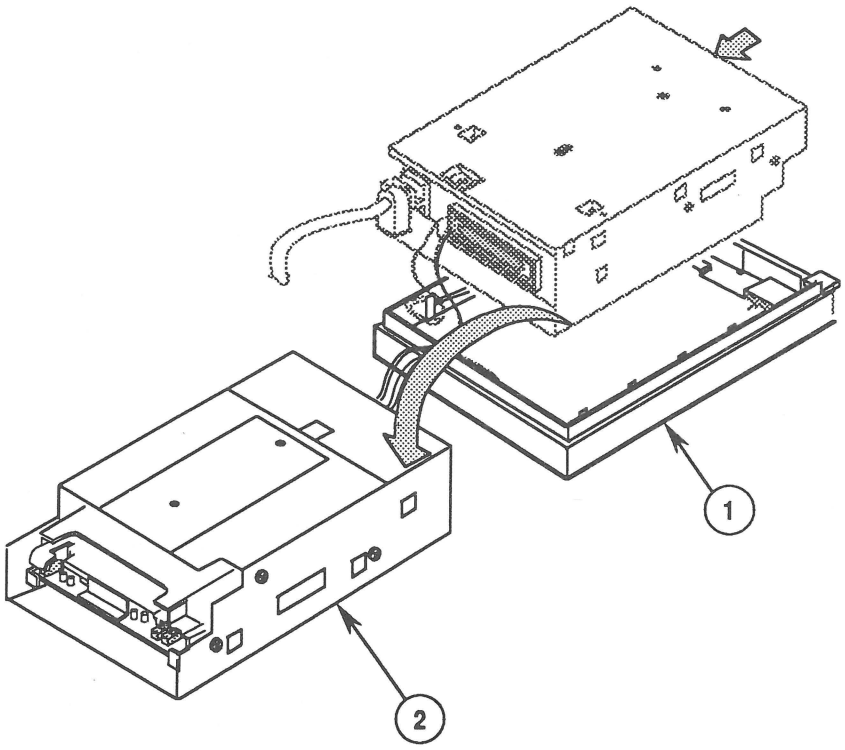


**FIGURE 3**

6. Grip the case top (Figure 3, #1) in one hand and the drive assembly (Figure 3, #2) in the other. Carefully slide the drive assembly as far as it will go toward the cable end of the case top.

7. Lift the drive assembly out of the case top. Then flip the drive assembly over as shown in Figure 3, and set it right side up on the padded surface. The drive assembly and case top will be end to end.

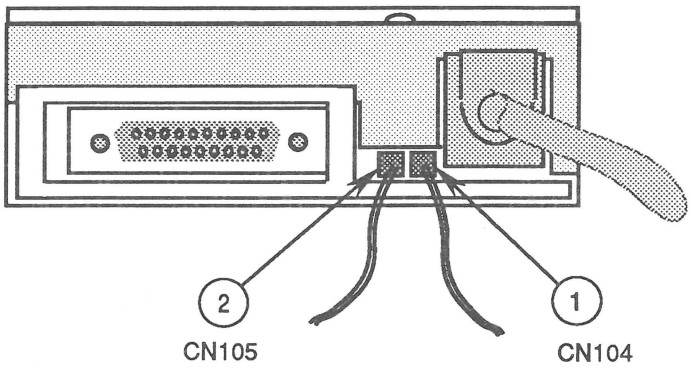


**FIGURE 4**

8. Using the needlenose pliers (if necessary), carefully disconnect the following cable connectors:

   - LED cable from drive assembly connector CN104 (Figure 4, #1)
   - Eject button cable from drive assembly connector CN105 (Figure 4, #2)

## Replace

To replace the case:

1. With the case assembly right side up on a padded surface as shown in Figure 4, reconnect the following cable connectors:

   - Eject button cable to drive assembly connector CN105 (Figure 4, #2)
   - LED cable to drive assembly connector CN104 (Figure 4, #1)

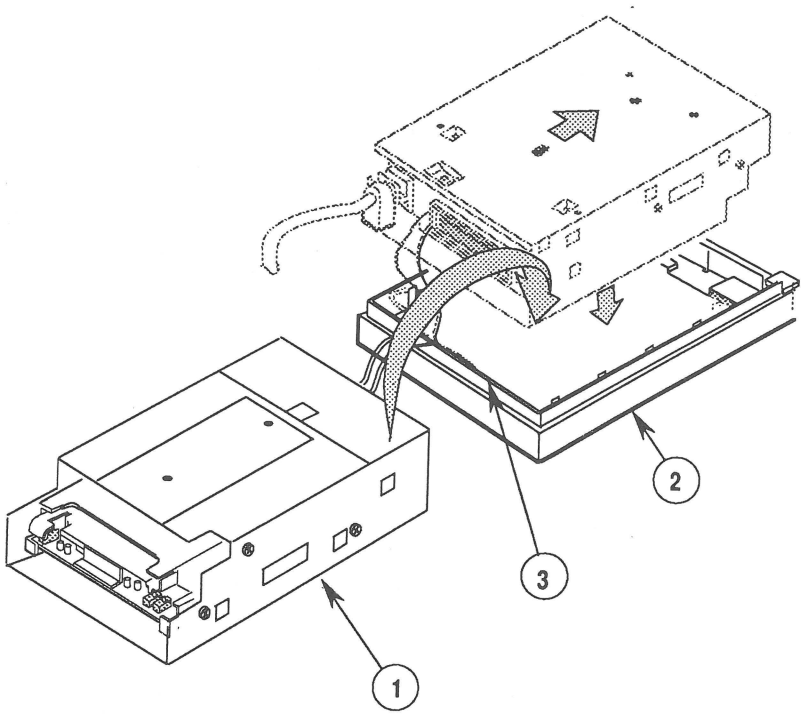


**FIGURE 5**

2. Flip the drive assembly (Figure 5, #1) over and place it upside down in the case top (Figure 5, #2). Place the drive assembly with its metal mounting tabs flush against the back edge (Figure 5, #3) of the case top.

3. Slide the drive assembly as far as it will go toward the front edge of the case top. The metal mounting tabs on the drive assembly should be secure beneath the plastic holding tabs on the case top, and the external drive cable anchor should be aligned with the edge of the case top.

4. Tuck the LED cable and the eject button cable out of the way inside the edges of the case top.

5. Replace the outermost groove on the external drive cable anchor (Figure 6, #1) over the edge (Figure 6, #2) of the case top.

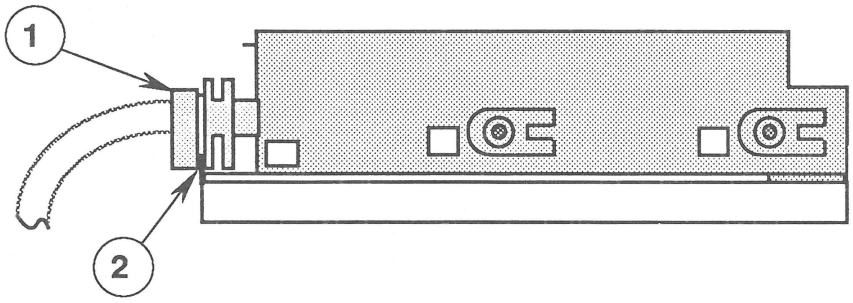


**FIGURE 6**

6. Replace the floppy metal shield (Figure 7, #1) on the drive assembly.

7. Replace the case bottom (Figure 7, #2) over the drive assembly. The external drive cable opening (Figure 7, #3) in the case bottom should fit over the innermost groove in the external drive cable anchor (Figure 7, #4). Press the case top firmly into place.

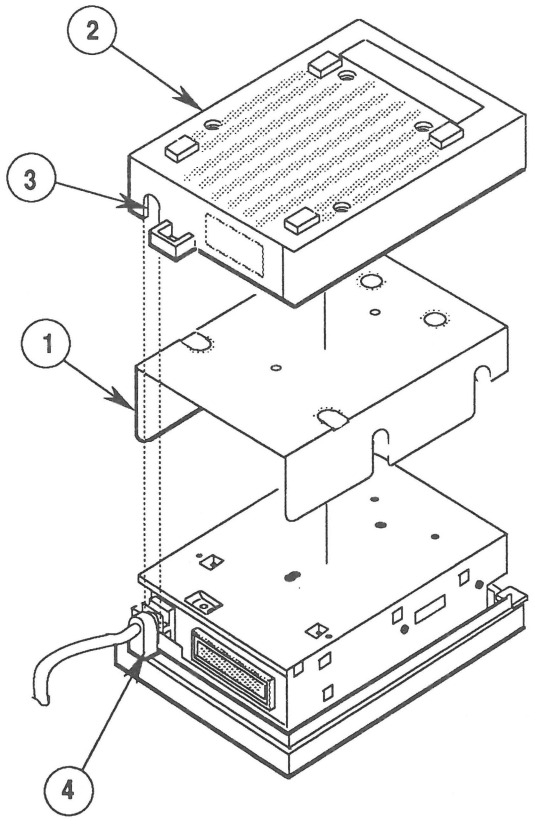


**FIGURE 7**

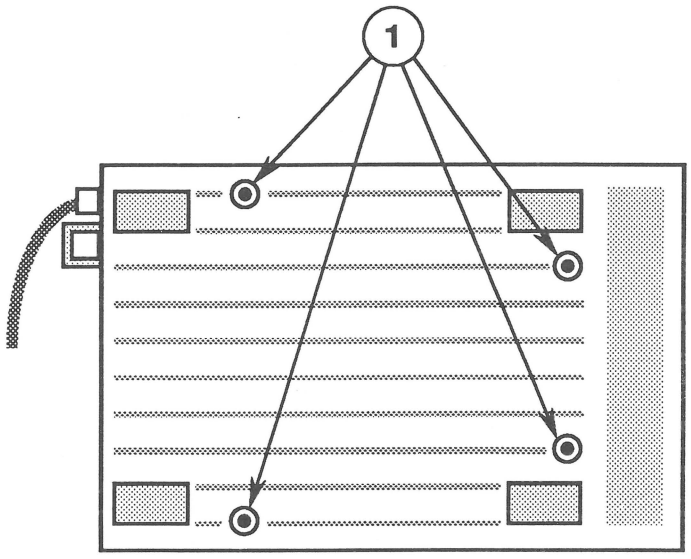


**FIGURE 8**

8. Replace the four screws (Figure 8, #1) in the case bottom.

## ❑ EXTERNAL DRIVE CABLE AND SHIELD

**Materials Required**

Small Phillips screwdriver

**Remove**

To remove the external drive cable and shield:

1. Remove the case.

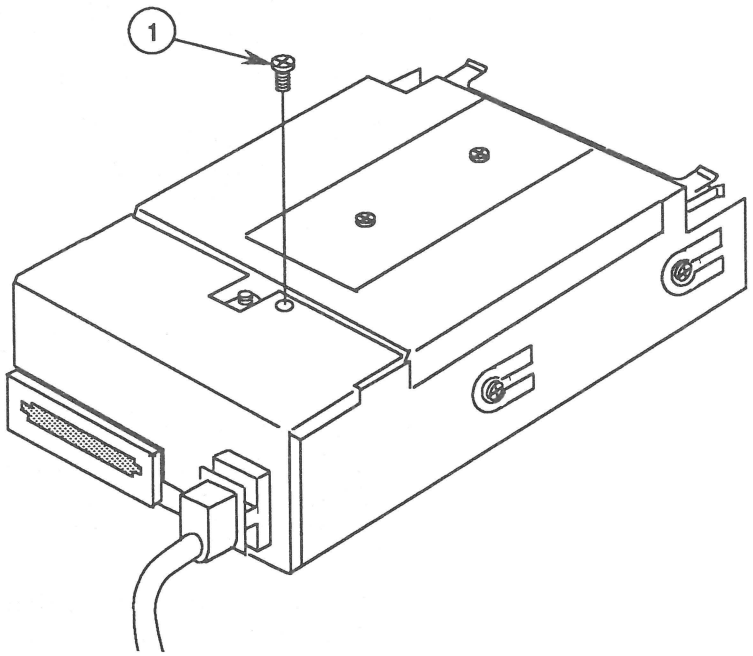


**FIGURE 9**

2. Remove the mounting screw (Figure 9, #1) from the external drive cable shield.

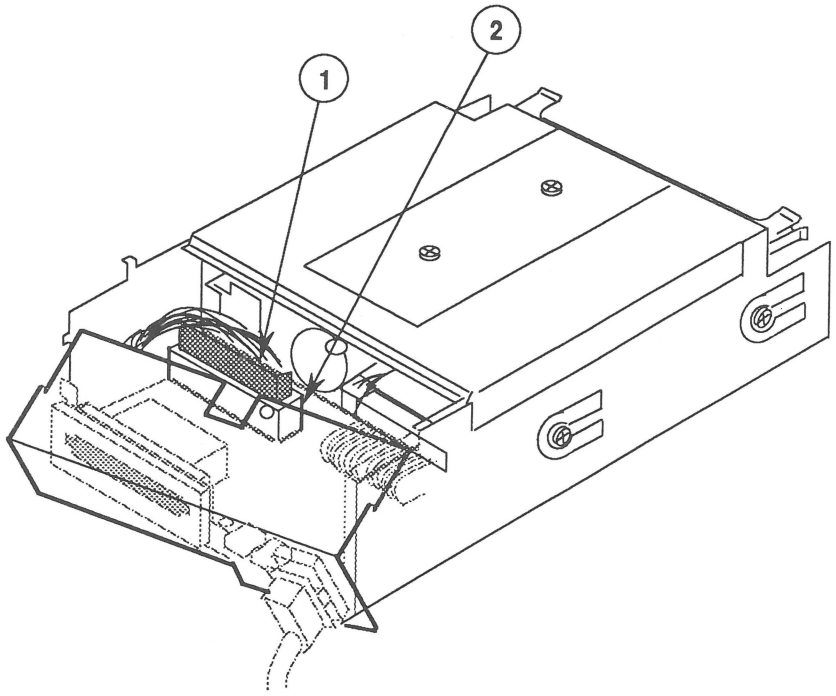


**FIGURE 10**

3. Carefully pull back the external drive cable shield, and disconnect the external drive cable (Figure 10, #1) from drive assembly connector CN101 (Figure 10, #2).

4. If you are replacing either the external drive cable (Figure 11, #1) or the shield (Figure 11, #2), first separate them by removing the ground screw (Figure 11, #3).

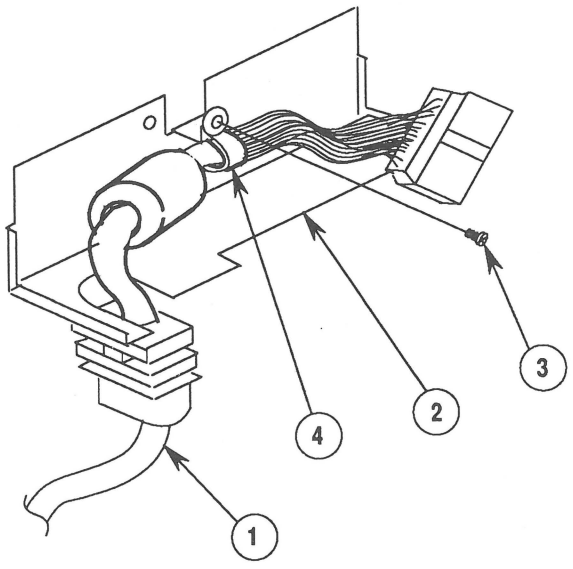


**FIGURE 11**

**Replace**

To replace the external drive cable and shield:

1. If necessary, replace the external drive cable (Figure 11, #1) in the shield clamp (Figure 11, #4), and replace the ground screw (Figure 11, #3).

2. Position the external drive cable and shield near the drive assembly, and connect the external drive cable (Figure 10, #1) to the drive assembly connector CN101 (Figure 10, #2).

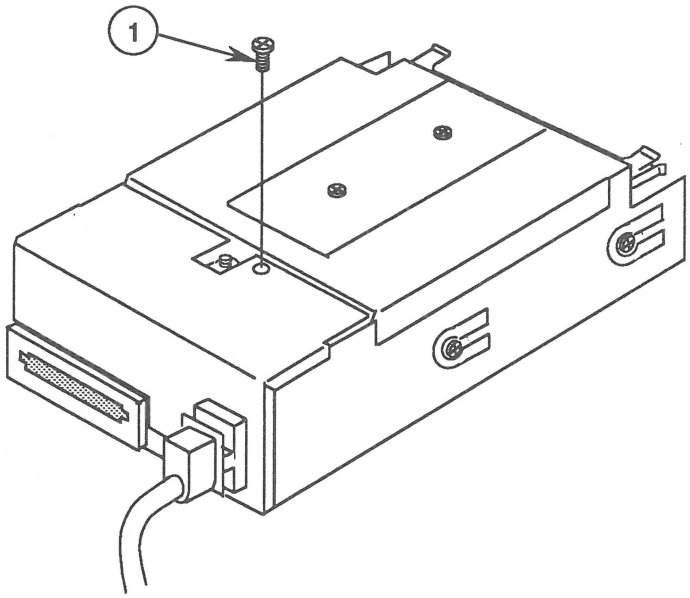


**FIGURE 12**

3. Replace the external drive cable shield on the drive assembly, and replace the mounting screw (Figure 12, #1).

4. Replace the case.

## ❑ DAISY CHAIN INTERFACE BOARD

**Materials Required**

Small Phillips screwdriver
Small flat-blade screwdriver or jeweler's screwdriver

**Remove**

To remove the daisy chain interface board:

1. Remove the case.

2. Remove the external drive cable and shield.

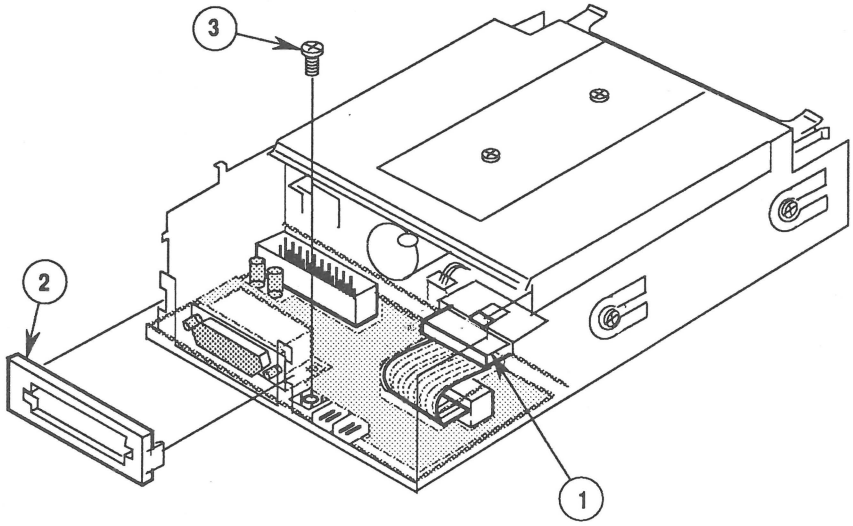


**FIGURE 13**

3. Disconnect cable connector CN102 (Figure 13, #1) from the drive mechanism. You may need a jeweler's screwdriver to pry off the connector at the small plastic tab.

4. Using a jeweler's screwdriver (if necessary), pull back the two side tabs and remove the plastic daisy chain cover (Figure 13, #2) from the outer metal shield.

5. Remove the screw (Figure 13, #3) that secures the daisy chain interface board to the outer metal shield.

6. Slide the daisy chain interface board (Figure 14, #1) to the right and remove it from the outer metal shield.

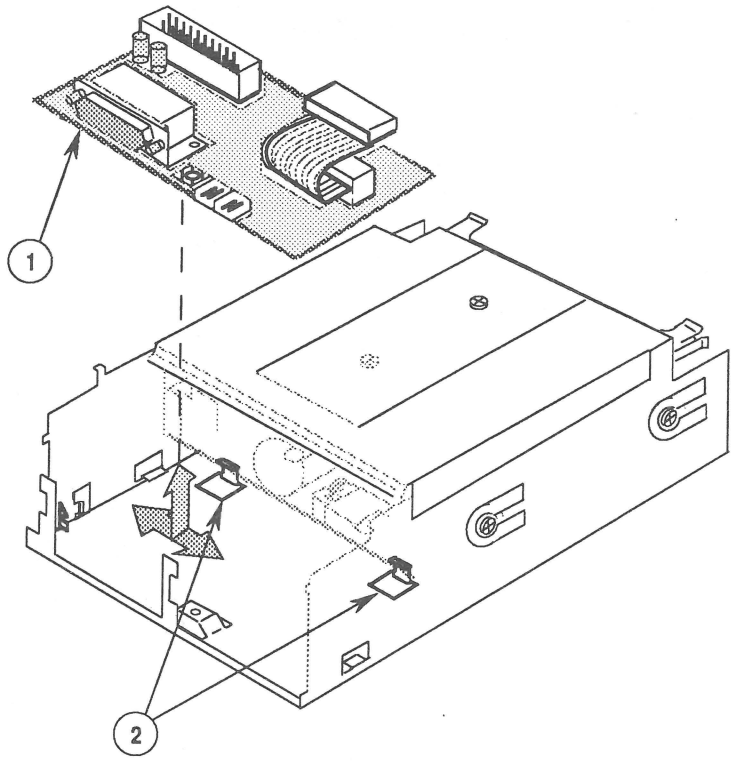


**FIGURE 14**

## Replace

To replace the daisy chain interface board:

1. Tuck the back edge of the daisy chain interface board (Figure 14, #1) under the holding tabs (Figure 14, #2) on the outer metal shield.

2. Slide the interface board to the left until the notch in the board clasps the holding bracket on the metal shield. Replace the interface board mounting screw (Figure 13, #3).

   ***Note:*** If you also removed the 1.4 MB drive mechanism, you should replace the mechanism now.

3. Replace the plastic daisy chain cover (Figure 13, #2) on the outer metal shield. Be sure to secure the two cover side tabs around the metal shield.

4. Reconnect cable connector CN102 (Figure 13, #1) to the drive mechanism.

5. Replace the external drive cable and shield.

6. Replace the case.

## ❑ 1.4 MB DRIVE MECHANISM

**Materials Required**

Medium Phillips screwdriver
Small flat-blade screwdriver or jeweler's screwdriver

**Remove**

To remove the 1.4 MB drive mechanism:

1. Remove the case.
2. Remove the external drive cable and shield.

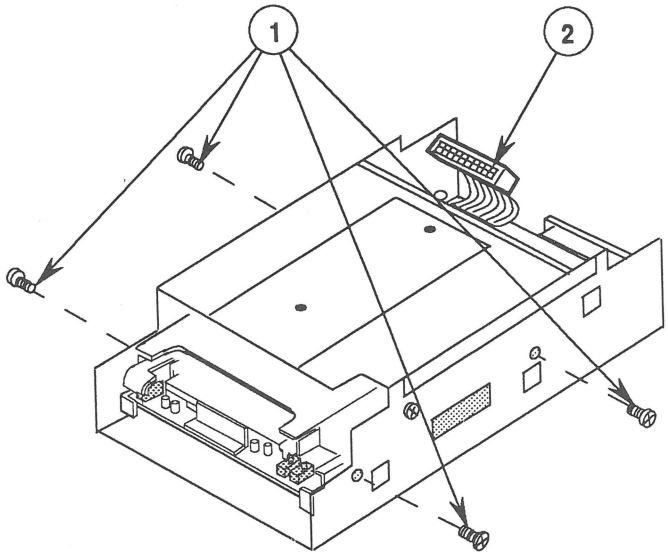


**FIGURE 15**

3. Remove the four screws (two screws from each side) (Figure 15, #1) from the outer metal shield.
4. Disconnect cable connector CN102 (Figure 15, #2) from the drive mechanism.

5. Slide the 1.4 MB drive mechanism out of the outer metal shield (Figure 16, #1) (away from the external cable end).

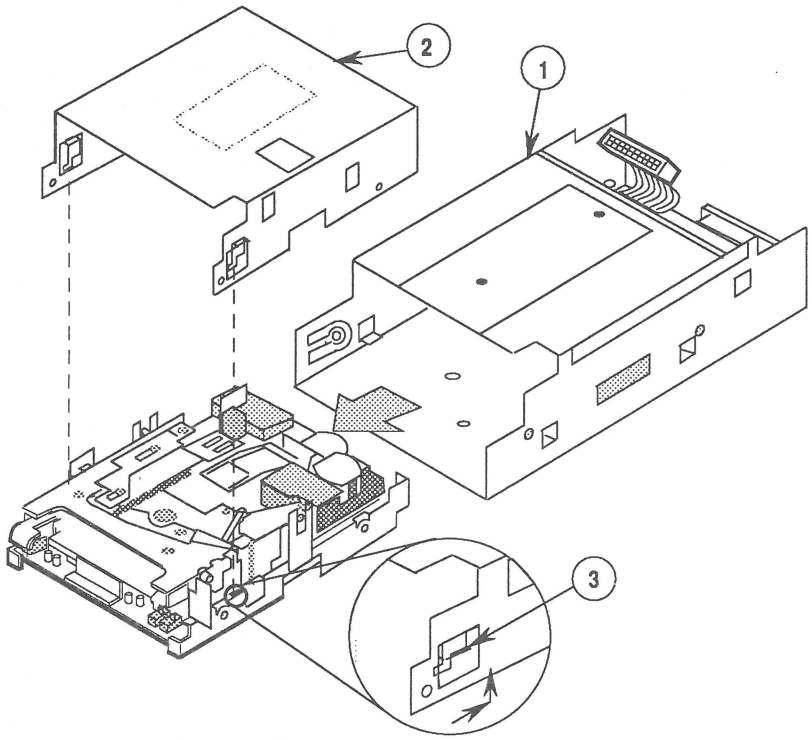


**FIGURE 16**

6. Remove the inner metal shield from the drive mechanism. To do this, first place the drive mechanism on a soft surface. Then push the inner metal shield (Figure 16, #2) in the direction of the arrow (see detail) until the tabs (Figure 16, #3) on each side of the shield clear the holes in the drive mechanism. Lift the drive mechanism off the shield.

   ***Note:*** Send the drive mechanism back to Apple **WITHOUT the inner metal shield**. (Save the shield to put on the replacement drive mechanism.) The drive mechanism **MUST** be sent back to Apple **in the Apple-approved shipping fixture**. See the Illustrated Parts List for more packaging information.

**Replace**

To replace the 1.4 MB mechanism:

1. If necessary, remove the shipping fixture from the new 1.4 MB drive mechanism. Then place the inner metal shield over the 1.4 MB drive mechanism as shown in Figure 16. Insert the two brackets (Figure 17, #1) on the shield into the holes in the drive mechanism, and push the shield in the direction of the arrow as shown in the detail below.

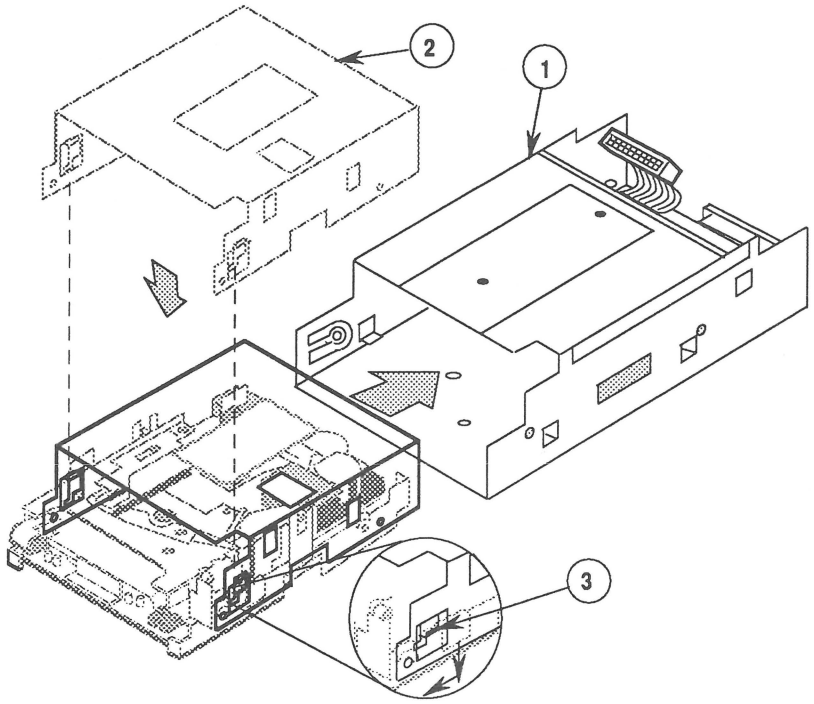


**FIGURE 17**

2. Slide the drive mechanism into the outer metal shield (Figure 17, #2). Be sure to insert the connector (CN102) end of the drive mechanism first.

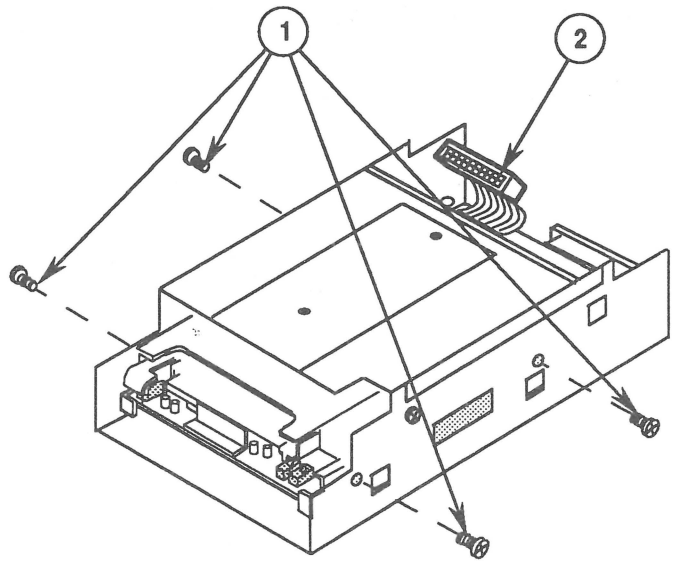


**FIGURE 18**

3. Replace the four screws (two screws on each side) (Figure 18, #1) on the outer metal shield.

   ***Note:*** If you also removed the daisy chain interface board, replace it now.

4. Connect cable connector CN102 (Figure 18, #2) to the drive mechanism.

5. Replace the external drive cable and shield.

6. Replace the case.

## ❑ EJECT SWITCH ASSEMBLY

**Materials Required**

Small Phillips screwdriver

**Remove**

To remove the eject switch assembly:

1. Remove the case.

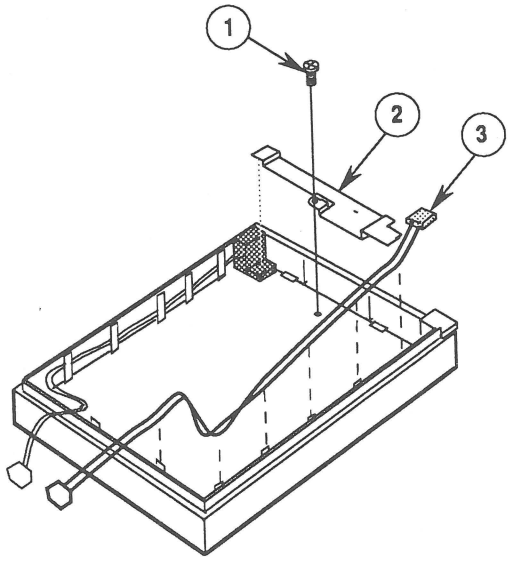


**FIGURE 19**

2. Remove the mounting screw (Figure 19, #1) that secures the metal bracket (Figure 19, #2) to the case top. Remove the metal bracket.

3. Lift the eject switch assembly (Figure 19, #3) off the holding tabs.

**Replace**

To replace the eject switch:

1. Position the eject switch (Figure 19, #3) over the holding tabs.

2. Replace the metal bracket (Figure 19, #2) on the case top, and replace the mounting screw (Figure 19, #1).

3. Replace the case.

## ❑ LED ASSEMBLY

**Materials Required**

Small Phillips screwdriver

**Remove**

To remove the LED assembly:

1. Remove the case.

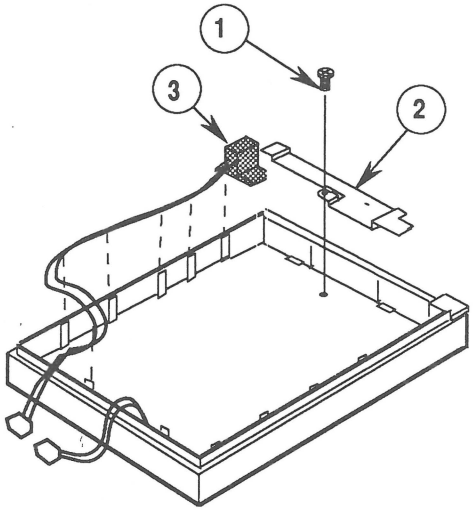


**FIGURE 20**

2. Remove the mounting screw (Figure 20, #1) that secures the metal bracket (Figure 20, #2) to the case top. Remove the metal bracket.

3. Lift the LED assembly (Figure 20, #3) off the holding tabs.

**Replace**

To replace the LED assembly:

1. Position the LED assembly (Figure 20, #3) over the holding tabs.

2. Replace the metal bracket (Figure 20, #2) on the case top, and replace the mounting screw (Figure 20, #1).

3. Replace the case.

Apple Technical Procedures

# Apple FDHD Drive

## Section 4 – Troubleshooting

### ❑ CONTENTS


4.2 Using the Apple FDHD Drive Symptom Chart
4.3 Apple FDHD Drive Symptom Chart

## ❑ USING THE APPLE FDHD DRIVE SYMPTOM CHART

### Troubleshooting Rules

General rules for troubleshooting the Apple FDHD Drive are as follows:

1. Use known-good software. (It can save you a lot of time!)

2. Be sure the cable is installed securely in the external disk drive port on the Macintosh.

3. If the Apple FDHD Drive demonstrates one of the symptoms listed on the symptom chart, replace the suspected modules or parts in the order listed under the corrective action(s). If a corrective action does not fix the problem, the original module or part should be reinstalled before the next step is performed.

## ❑ APPLE FDHD DRIVE SYMPTOM CHART

| Symptom | Corrective Action |
|---|---|
| • *Drive will not come on; LED flashes once or does not light* | 1. Replace drive mechanism.<br>2. Replace external drive cable.<br>3. Replace LED assembly. |
| • *Drive will read but not write* | 1. Replace drive mechanism.<br>2. Replace external drive cable. |
| • *Drive will not read but LED comes on* | 1. Check software.<br>2. Replace drive mechanism. |
| • *Drive will not eject disk* | 1. Replace drive mechanism.<br>2. Replace eject switch cable assembly. |
| • *Drive functions, but LED does not light* | 1. Replace LED assembly.<br>2. Replace drive mechanism. |
| • *MS-DOS drive does not recognize a disk formatted on a 1.4 MB FDHD drive* | – If compatibility in reading and writing files with the 1.4 MB FDHD is desired, format all disks with the MS-DOS drive first. |
| • *Drive will read/write to 800K disks but not to HD disks* | 1. Check that the drive is an FDHD. If you are unsure, refer to Section 1, Basics.<br>2. Replace drive mechanism. |

Apple Technical Procedures

# Apple FDHD Drive

## Illustrated Parts List

## ❑ CONTENTS

IPL.3 Finished-Goods Assembly (Figure 1)
IPL.5 Service Packaging, 800K/1.4 MB Drives (Figure 2)

The figures and lists in this section include all piece parts that can be purchased separately from Apple for the Apple FDHD Drive, along with their part numbers. These are the only parts available from Apple. Refer to your *Apple Service Programs* manual for prices.

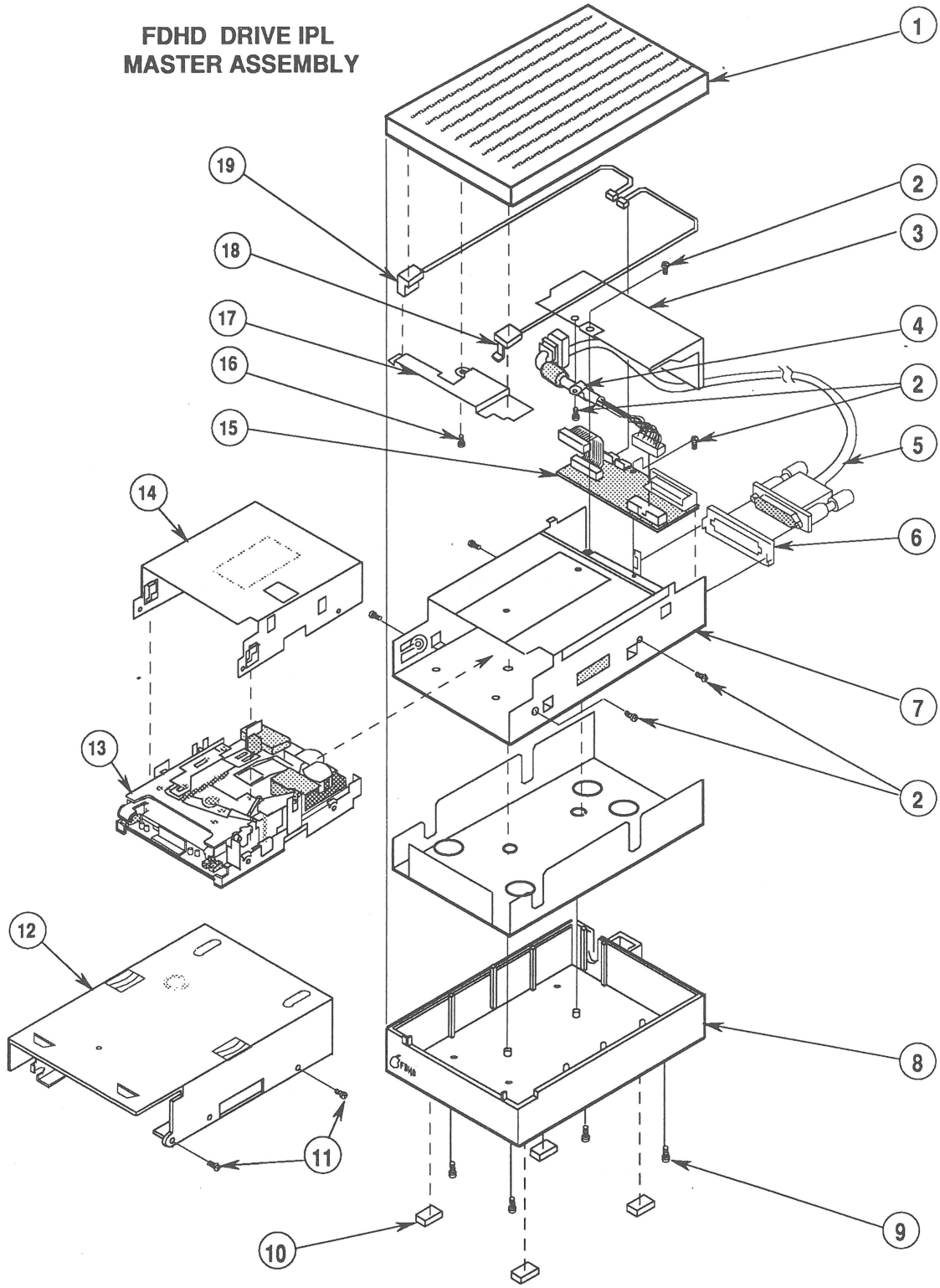
FDHD DRIVE IPL
MASTER ASSEMBLY
1
19
2
3
18
17
4
16
2
15
5
14
6
7
13
2
12
8
11
9
10

**FIGURE 1**

## ❑ FINISHED-GOODS ASSEMBLY (Figure 1)

| Item | Part No. | Description |
|---|---|---|
| 1 | 815-0955 | Plastic Top Case, Platinum |
| 2 | 416-1304 | Metal Shield Screw |
| 3 | 805-0807 | External Drive Cable Shield |
| 4 | 805-0378 | External Drive Cable Clamp |
| 5 | 590-4360 | External Drive Cable |
| 6 | 815-0969 | Plastic Daisy-Chain Cover |
| 7 | 603-5106 | Outer Metal Shield |
| 8 | 603-5117 | Bottom Case Assembly |
| 9 | 416-1305 | Plastic Case Screw |
| 10 | 865-0045 | Plastic Case Foot |
| 11 | 462-3401 | Screw, M 3 x 6 (with two washers) |
| 12 | 805-5050 | Floppy Metal Housing (for transporting) |
| 13 | 661-0474 | 1.4 MB Mechanism, Apple FDHD (blue-on-silver label) |
| 14 | 805-0156 | Inner Metal Shield |
| 15 | 076-0234 | Daisy-Chain Interface Board |
| 16 | 420-1011 | Eject Switch Bracket Screw |
| 17 | 805-0811 | Eject Switch Bracket |
| 18 | 603-5110 | Eject Switch Cable Assembly |
| 19 | 603-5118 | LED Cable Assembly |

***Note:*** The floppy metal housing for transporting is required when using using 1.4 MB drive packaging.

The 800K internal drive shield for transporting is required when using 800K drive packaging.

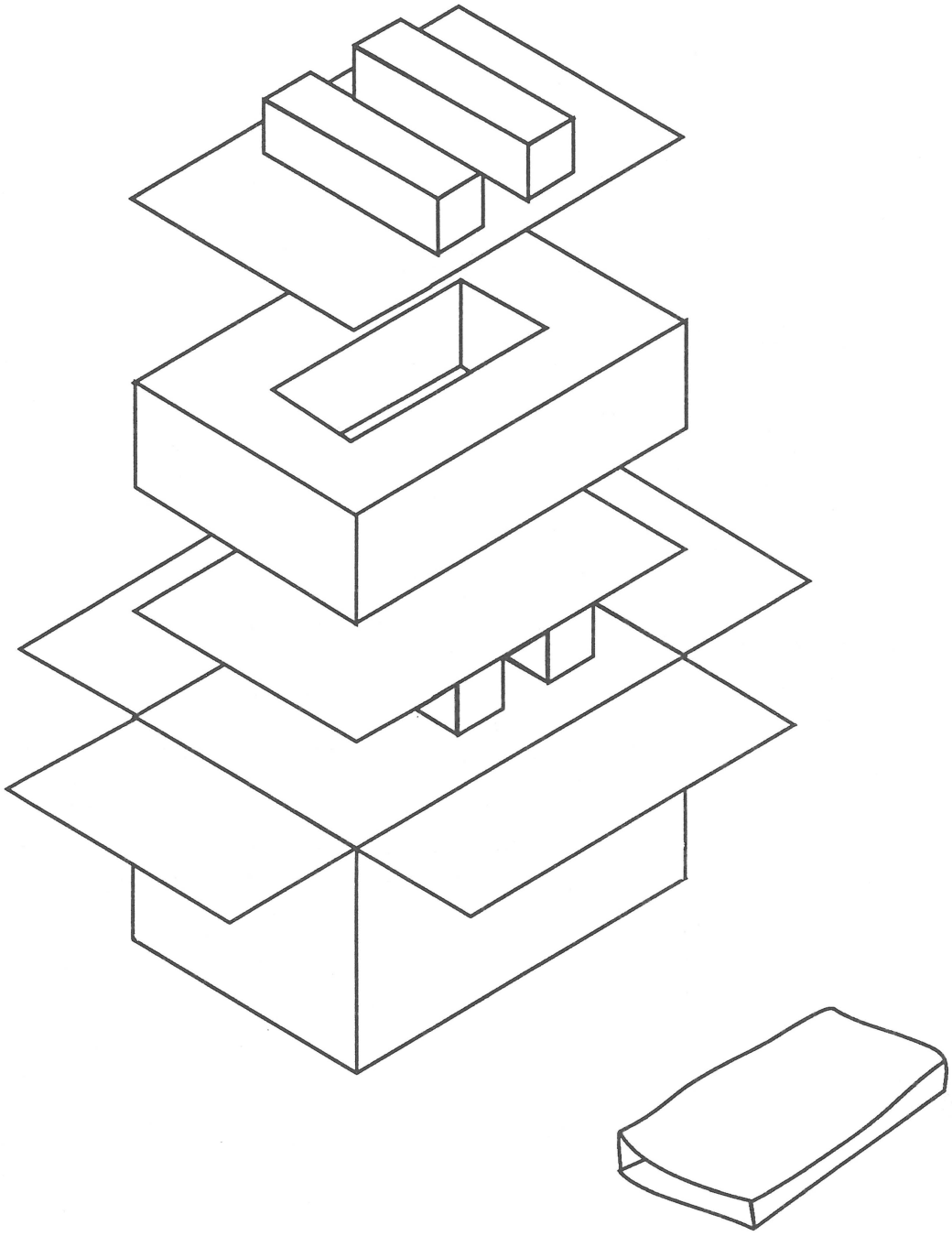

**FIGURE 2**

## ❑ SERVICE PACKAGING, 800K/1.4 MB DRIVES (Figure 2)

| Item | Part No. | Description |
|---|---|---|
| – | 602-0210 | Service Packaging, 800K/1.4 MB Drives |

Apple Technical Procedures

# AppleFax Modem

## Technical Procedures

## ❑ TABLE OF CONTENTS


| | | |
|---|---|---|
| **Section 1 – Basics** | 1.3 | Introduction |
| | 1.4 | AppleFax Modem |
| | 1.4 | Outside AppleFax |
| | 1.6 | Inside AppleFax |
| **Section 2 – Take-Apart** | 2.2 | Top Cover |
| | 2.4 | Subassembly |
| | 2.6 | Main Logic Board and Speaker |
| **Section 3 – Diagnostics** | 3.2 | Introduction |
| | 3.2 | Using FaxTest |
| | 3.2 | Materials Required |
| | 3.2 | Hardware Setup |
| | 3.3 | Starting FaxTest |
| | 3.3 | The Tests |
| | 3.5 | Selecting Tests |
| | 3.6 | Running the Tests |
| | 3.6 | Checking the ROM Revision |
| | 3.7 | Testing the Phone Cord |
| **Section 4 – Troubleshooting** | 4.2 | Introduction |
| | 4.2 | Using the Symptom Chart |
| | 4.2 | Using the Troubleshooting Flowchart |
| | 4.3 | Symptom Chart |
| | 4.5 | Troubleshooting Flowchart |
| **Section 5 – Additional Procedures** | 5.2 | ROM Upgrade |
| | 5.2 | Introduction |
| | 5.2 | Materials Required |
| | 5.2 | Installation |
| **Illustrated Parts List** | IPL.3 | Main Assembly (Figure 1) |

©Apple Computer, Inc., 1988. No portion of this document may be reproduced in any form without the written permission of Apple Computer, Inc.

AppleFax and Macintosh are trademarks of Apple Computer, Inc.

Apple and the Apple logo are registered trademarks of Apple Computer, Inc.

Apple Technical Procedures

# AppleFax Modem

## Section 1 – Basics

## ❑ CONTENTS


1.3 Introduction
1.4 AppleFax Modem
1.4 Outside AppleFax
1.6 Inside AppleFax

## ❑ INTRODUCTION

The AppleFax™ Modem is a special type of modem that can send and receive text and graphics images. With an AppleFax Modem and AppleFax software, you can turn a Macintosh™ computer into an AppleFax station.

An *AppleFax station* allows you to use phone lines to transfer documents between the AppleFax station and a facsimile (fax) machine, or between the AppleFax station and another AppleFax station.

A *facsimile machine* uses photocopy and modem technology to transfer documents between fax machines. To send a fax document, you feed the document into the fax machine, the machine sends an electronic copy to the destination fax machine, and the destination machine prints the copy. Most fax machines serve as both a source and a destination machine.

An AppleFax station also serves as both a source and a destination fax machine. An AppleFax station allows you to:

- Send Macintosh documents containing text, graphics, or both text and graphics to facsimile machines for printing.
- Receive documents from facsimile machines and save them as files, print them, or view them on the computer screen.
- Send and receive documents or files between your AppleFax station and other AppleFax stations.
- Store documents or files from other AppleFax stations and later forward them to the destination AppleFax station.
- Attach another serial device (such as a printer or a conventional modem) to the AppleFax Modem and select either device (the AppleFax Modem or the serial device) with a switch on the AppleFax Modem.

## ❑ APPLEFAX MODEM

**Outside AppleFax**

The AppleFax Modem has five exterior connectors, two switches, two lamps, and one volume control.

*Connectors*

Three of the connectors on the back of the modem must be used for operation:

- The power connector (Figure 1, #1) joins the modem to the external power supply.
- The Macintosh connector (Figure 1, #2) joins the modem to the computer.
- The phone line connector (Figure 1, #3) joins the modem to the phone line.

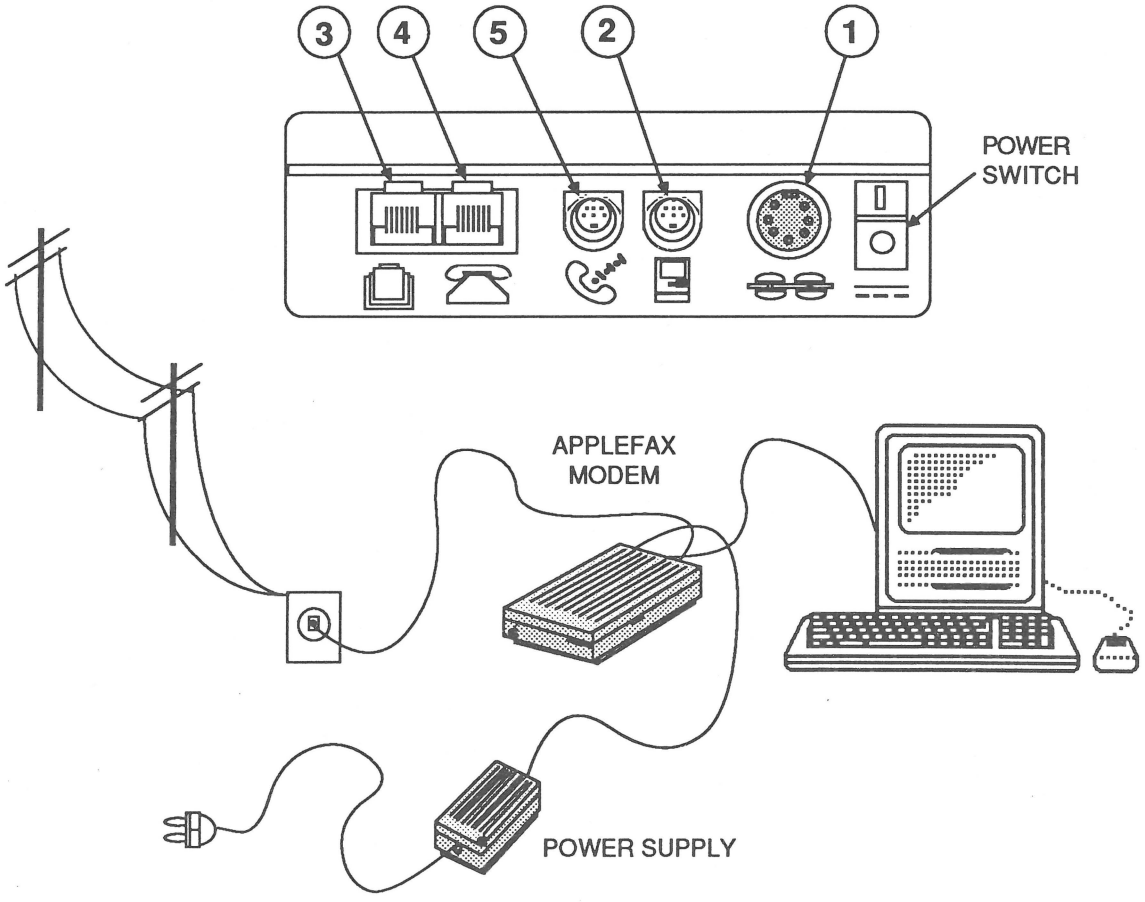


**FIGURE 1**

The minimum configuration provided by these three connectors establishes a data path between the Macintosh and the worldwide network of phone lines.

Two connectors on the AppleFax Modem serve auxiliary functions and are not required for fax mode operation. The telephone connector (Figure 1, #4) can be used to connect a telephone to the same phone line used by the modem. The modem connector (Figure 1, #5) provides an additional serial port that may be used by printers and conventional modems to connect to the Macintosh.

### *Lamps and Controls*

After the power switch is turned on, the AppleFax Modem operates in either the fax mode or the pass-through mode, as selected by the mode select switch at the front of the modem (see Figure 2). Pressing the mode switch allows you to toggle back and forth between the two modes.

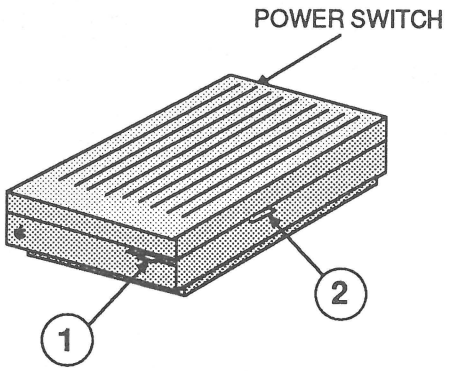


**FIGURE 2**

When the modem is in the fax mode, the green lamp to the right of the mode select switch is on. In this mode, the AppleFax Station can communicate with facsimile machines and other AppleFax Stations. The volume control lever (Figure 2, #2) can be adjusted to monitor phone line connection activity (dialing) or to silence the modem.

When the modem is in the pass-through mode, the yellow lamp to the left of the mode select switch is on. In this mode, the Macintosh can communicate with the serial device connected to the modem port on the AppleFax Modem, but the Macintosh cannot send and receive data over the phone lines.

## Inside AppleFax

Figure 3 is a simplified block diagram of the components inside the AppleFax modem.

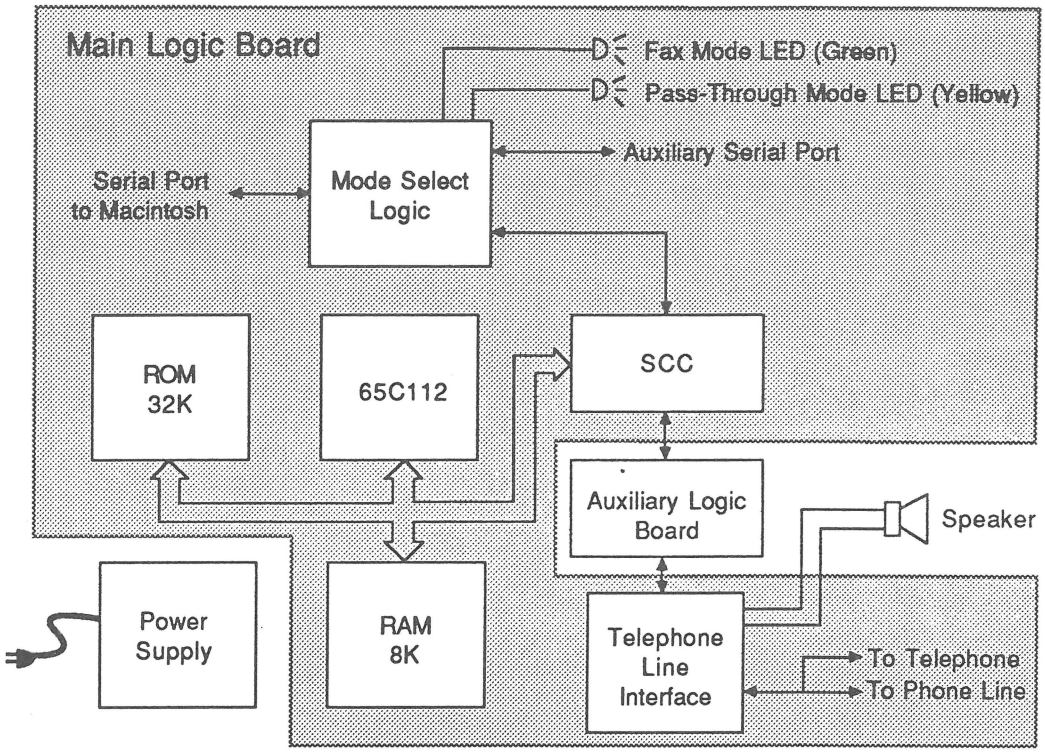


**FIGURE 3**

Except for the the auxiliary logic board, the power supply, and the speaker, the components in Figure 3 are assembled on a single printed circuit board called the main logic board. The auxiliary logic board mounts on the main logic board and, although some power supply circuitry is mounted on the main logic board, most of the power supply circuitry is enclosed in a separate case.

### *Mode Select Logic*

The mode select logic (see Figure 3) determines whether the Macintosh is communicating with the modem logic (fax mode), or with an external device connected to the auxiliary serial port (pass-through mode). During fax mode communication, the mode select logic performs the conversion between the differential voltage data format used by the Macintosh serial ports and the digital data format used inside the modem.

*65C112 and ROM*

When operating in the fax mode, the 65C112 microprocessor controls communication between the Macintosh and the phone line using instructions stored in Read-Only Memory (ROM).

*SCC and RAM*

During fax transfers, data from the Macintosh is routed to the Serial Channel Controller (SCC) where it is converted to the parallel data format used by the microprocessor. Random-Access Memory (RAM) serves as an interim storage center until the data is ready to be transferred over the phone lines.

*Auxiliary Logic Board*

The auxiliary logic board is responsible for all communication over the phone lines. This board converts data between the parallel digital data format used by the microprocessor and the serial analog data format used by fax machines over phone lines. The auxiliary logic board also handles the protocols used for exchanging data with facsimile machines.

*Telephone Line Interface*

The telephone line interface circuit is the connection between the auxiliary logic board and the phone line. This interface includes a ring detector, an off-hook switch, and the components (such as the volume control switch and the speaker) that are used for monitoring the phone line.

Apple Technical Procedures

# AppleFax Modem

## Section 2 – Take-Apart

## ❑ CONTENTS


2.2 Top Cover
2.4 Auxiliary Logic Board
2.6 Main Logic Board and Speaker


***Note:*** If a step is underlined, detailed instructions for that step can be found elsewhere in the section.

## ❑ TOP COVER

**Materials Required**

Flatblade screwdriver
Grounded workbench pad
Grounded wriststrap

**Remove**

1. Turn off the AppleFax Modem and remove the power cord.
2. Place the modem on a grounded workbench pad and put on your grounding wriststrap.
3. Locate the two locking tabs shown in Figure 1, #1.
4. Using a screwdriver, carefully push in each locking tab until you can lift the tabs free of the lower case.
5. Lift the back of the top cover up and forward until the interior latch on the front of the cover separates from the lower case.

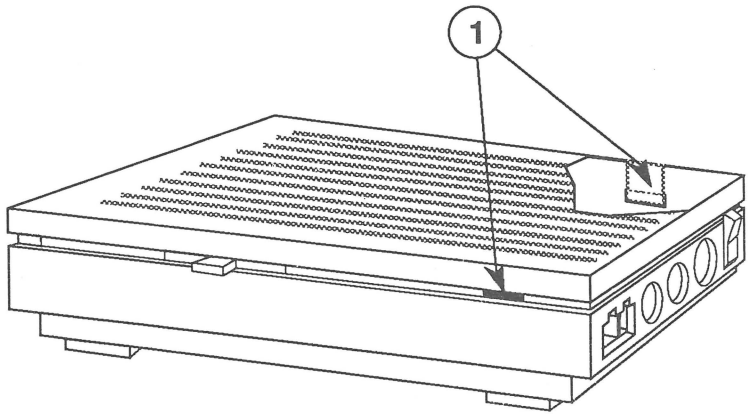


**FIGURE 1**

**Replace**

1. Set the top cover on top of the case.

2. Push down on the front of the top cover until it snaps into place.

3. Set one of the locking tabs inside the back of the lower case and push down on the top cover until the tab snaps into place. Then push down on the other side of the top cover until the other tab snaps into place. (If the second locking tab will not fit inside the lower case, use a flatblade screwdriver to push in gently on the tab while you push down on the top cover.)

## ❑ AUXILIARY LOGIC BOARD

**Materials Required**

Grounded workbench pad
Grounded wriststrap

**Remove**

1. Remove the top cover.
2. Locate the auxiliary logic board (Figure 2, #1).
3. Carefully lift the ends of the auxiliary logic board until it pulls free of the connectors on the main logic board.

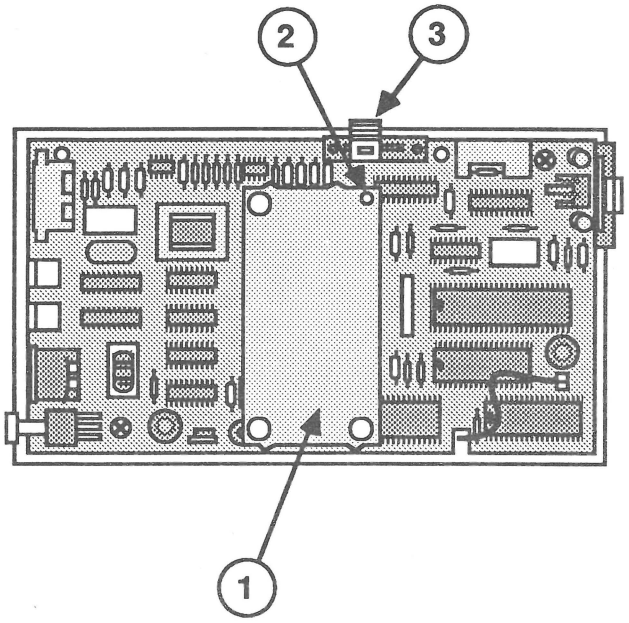


**FIGURE 2**

**Replace**

1. Position the auxiliary logic board above the main logic board so that the smallest corner hole (Figure 2, #2) is nearest the volume lever (Figure 2, #3).

2. Align the pins on the auxiliary logic board with the connectors on the main logic board, and gently push down on the auxiliary logic board.

---

***CAUTION:*** *Align the auxiliary logic board and its pins carefully before you push down. If the auxiliary logic board is oriented incorrectly (rotated 180 degrees from the correct position), or if the pins are not aligned properly, pins may bend or break.*

---

3. Replace the top cover.

## ❑ MAIN LOGIC BOARD AND SPEAKER

**Materials Required**

#2 Phillips screwdriver
Grounded workbench pad
Grounded wriststrap

**Remove**

1. Remove the top cover.
2. Remove the auxiliary logic board.
3. Lift up on the volume lever to remove it (Figure 3, #1).
4. Lift up on the light pipe assembly to remove it (Figure 3, #2).
5. Disconnect the speaker cable (Figure 3, #3).
6. Remove the two Phillips screws (Figure 3, #4).
7. Lift the main logic board out of the case.
8. If you are replacing the speaker, lift the speaker out of the case.

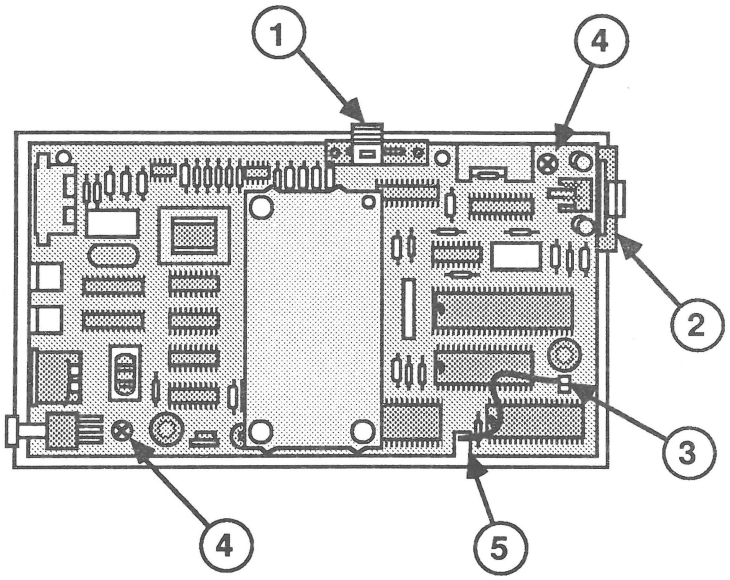


**FIGURE 3**

## Replace

1. If the speaker was removed, place the speaker in the bottom of the case so that the cable extends toward the left side of the case (Figure 4, #1).

2. Position the main logic board above the case and route the speaker cable through the slot on the left side of the board (Figure 3, #5). Lower the main logic board into the case.

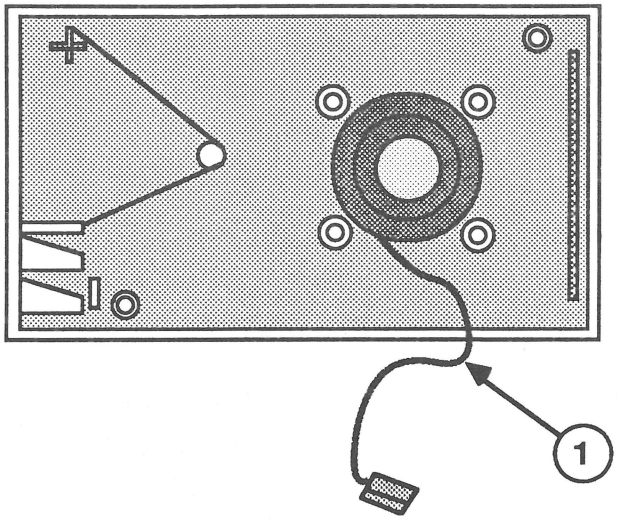


**FIGURE 4**

*...Continued on next page*

3. Replace the two Phillips screws (Figure 5, #1).

4. Plug the speaker cable into the connector on the main logic board (Figure 5, #2).

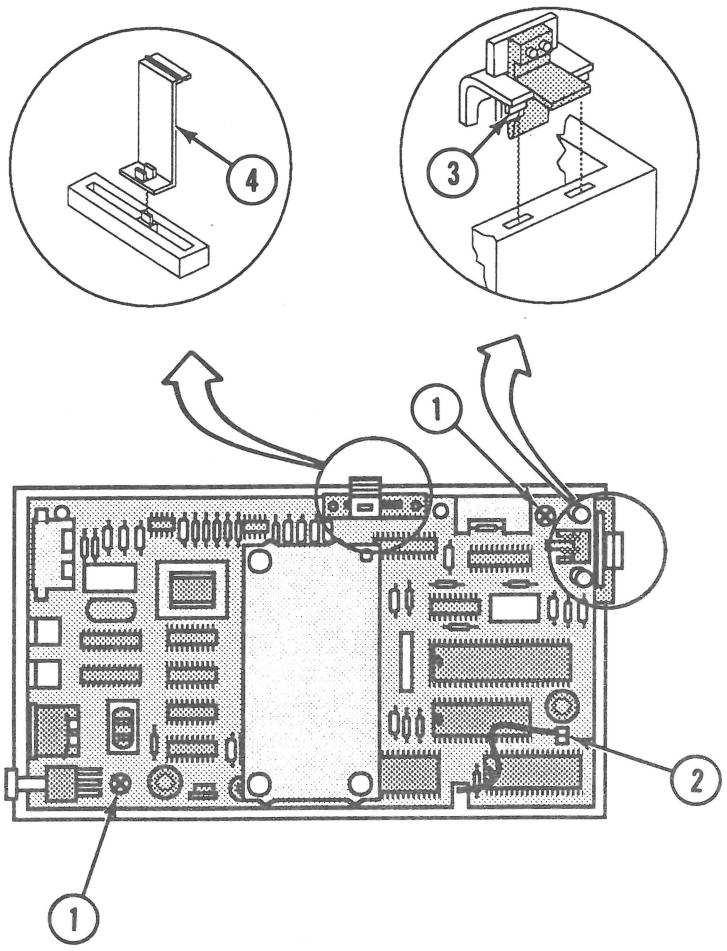


**FIGURE 5**

5. Replace the light pipe assembly (Figure 5, #3).

***CAUTION:*** *The smallest clear tabs on the bottom front of the light pipe assembly fit into the holes in the case. The assembly will break if the larger tabs (directly behind the smaller tabs) are forced into the holes.*

6. Replace the volume lever (Figure 5, #4).

7. Replace the auxiliary logic board.

8. Replace the top cover.

Apple Technical Procedures

# AppleFax Modem

## Section 3 – Diagnostics

## ❑ CONTENTS


3.2 Introduction
3.2 Using FaxTest
3.2 Materials Required
3.2 Hardware Setup
3.3 Starting FaxTest
3.3 The Tests
3.5 Selecting Tests
3.6 Running the Tests
3.6 Checking the ROM Revision
3.7 Testing the Phone Cord

## ❑ INTRODUCTION

This section describes how to use the FaxTest program to test the AppleFax Modem and check the ROM revision. It also describes how to test the phone cord supplied with the AppleFax Modem.

## ❑ USING FAXTEST

**Materials Required**

Known-good Macintosh Plus, SE, or II
2 known-good Apple System/Peripheral-8 cables
*Macintosh Peripheral Tests* diskette
AppleFax Modem

**Hardware Setup**

1. Connect the AppleFax power supply to the AppleFax Modem and to a power outlet.

2. Connect one peripheral cable to the modem port on the Macintosh and to the Macintosh port on the AppleFax Modem.

3. Connect the other peripheral cable to the printer port on the Macintosh and to the modem port on the AppleFax Modem.

4. Power on the AppleFax Modem.

   At power on, the AppleFax Modem runs some ROM and RAM tests. The yellow LED will light momentarily, and then the green LED should light.

   If the yellow LED stays on after power on, or if both lights turn on or start blinking, replace the main logic board.

***IMPORTANT:*** *One of the FaxTest tests uses the modem dialer to generate dialing tones. To avoid unwanted phone calls and charges, do not connect the AppleFax Modem to a phone line while testing.*

## Starting FaxTest

1. Insert the *Macintosh Peripheral Tests* diskette into the Macintosh internal drive, and power on the Macintosh.

2. Turn AppleTalk off as follows:

   a) Pull down the  menu and select **Chooser**.

   b) Click on the **AppleTalk Inactive** button.

   c) Click **Continue** when the dialog box appears, but do not disconnect any cables.

3. Double-click on the **Macintosh Peripheral Tests** disk icon.

4. Double-click on the **FaxTest** icon.

   FaxTest is now ready to run tests.

## The Tests

FaxTest provides four tests for the AppleFax Modem:

- Main Logic Board Test
- Auxiliary Logic Board Test
- Pass-Through Mode Test
- Volume Control Switch and Speaker Test

You can run all four tests in succession, or you can run any combination of the tests. You can choose to run the selected tests only once, or you can have the tests repeat until a failure occurs or until you stop the test.

***Note:*** You should always run all four tests at least once to verify proper AppleFax Modem operation.

***IMPORTANT:*** *The tests do not test the analog circuitry used to connect to the phone line.*

*Main Logic Board Test*

The Main Logic Board Test checks the digital circuitry on the main logic board. This is a pass/fail confidence test. After you start the test, you can let it run unattended.

*Auxiliary Logic Board Test*

The Auxiliary Logic Board Test examines the circuitry on the auxiliary logic board. This is also a pass/fail confidence test. After you start the test, you can let it run unattended.

*Pass-Through Mode Test*

The Pass-Through Mode Test checks the pass-through circuitry on the main logic board. This is also a pass/fail confidence test. After you start the test, you can let it run unattended.

> ***Note:*** If this test fails, check to see that AppleTalk is off and that the cable between the modem port on the AppleFax Modem and the printer port on the Macintosh is properly connected.

*Volume Control Switch and Speaker Test*

The Volume Control Switch and Speaker Test produces a series of tones. FaxTest cannot detect these speaker sounds, however, so you must be present during this test to determine if the test passes or fails. If you hear rapid dialing tones, nine single tones, and then a short, rapid series of tones, the test passes. If you adjust the volume lever correctly and do not hear the tones, the modem is not operating correctly.

During this test, you should move the volume control lever forward and back to verify that the control is working. When the lever is all the way back (toward the rear of the modem), you should not be able to hear any sounds.

## Selecting Tests

To select tests:

1. Start up FaxTest (see "Starting FaxTest" above).
2. Pull down the **Options** menu and select **Test Selections**.

   FaxTest displays the Test Selections window (Figure 1).

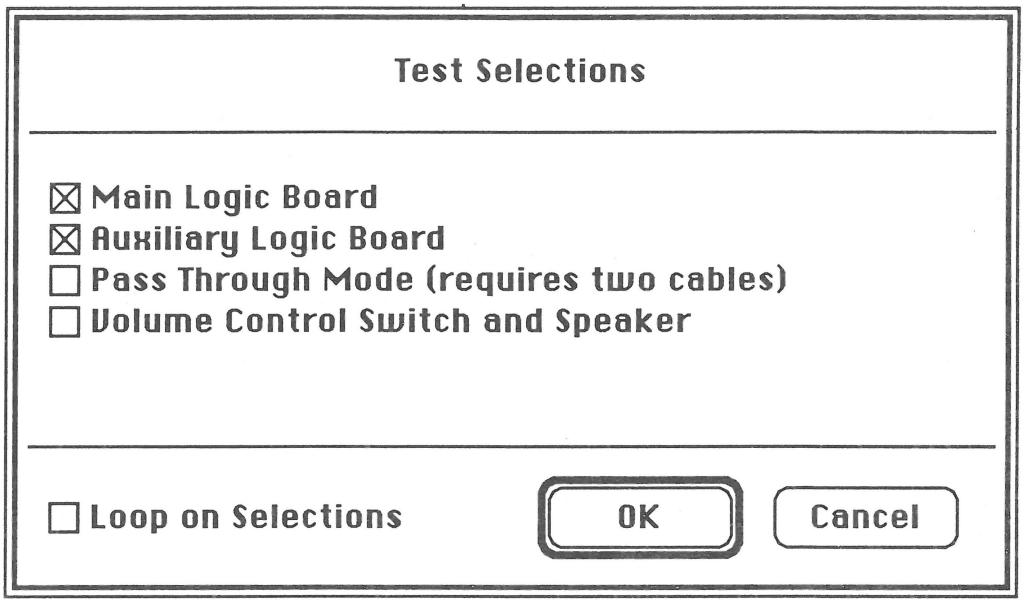


**FIGURE 1**

3. For each test that you want to run, click in the check box beside the test name until an X appears.
4. If you want the tests to repeat until you stop them, click in the check box for **Loop on Selections** until an X appears.
5. Click **OK**.
6. If you want FaxTest to remember your test selections, pull down the **File** menu and select **Save Test Selections**.

## Running the Tests

Click **Start** to run the tests. FaxTest runs all selected tests.

If a test fails, the test stops and FaxTest displays the suspected problem. Follow the instructions on the screen or turn to the flowchart in Section 4, Troubleshooting, for additional instructions.

After all tests have been run successfully, FaxTest will display a dialog box containing the message **All tests passed** and the revision of the AppleFax Modem ROM. See "Checking the ROM Revision" for additional information.

If you suspect an intermittent problem, open the Test Selections window and click in the check box for **Loop on Selections**. Run the tests and let them loop for an hour. If the tests are still running after an hour, the AppleFax Modem is probably good (the tests do not check the analog circuitry on the logic boards).

To stop FaxTest, click on the **Stop** button in the FaxTest window.

## Checking the ROM Revision

There are two methods to check the ROM revision:

1. Run any of the four tests available; the ROM revision will be reported upon completion of the test.

2. Pull down the **Options** menu and select **Configuration**.

**If the ROM revision is not 1.1 or higher,** refer to Section 5, Additional Procedures, to perform the ROM upgrade.

## ❑ TESTING THE PHONE CORD

To test the AppleFax Modem phone cord:

1. Locate a working telephone that has a modular connector where the telephone cord meets the telephone jack (Figure 2, #1). Lift the receiver and verify that a dial tone is present.

2. Disconnect the telephone cord from the telephone jack (Figure 2, #1) and connect it to the modem telephone jack (Figure 2, #2).

3. Connect the modem phone cord to the phone line jack on the modem (Figure 2, #3) and to the telephone jack (Figure 2, #4).

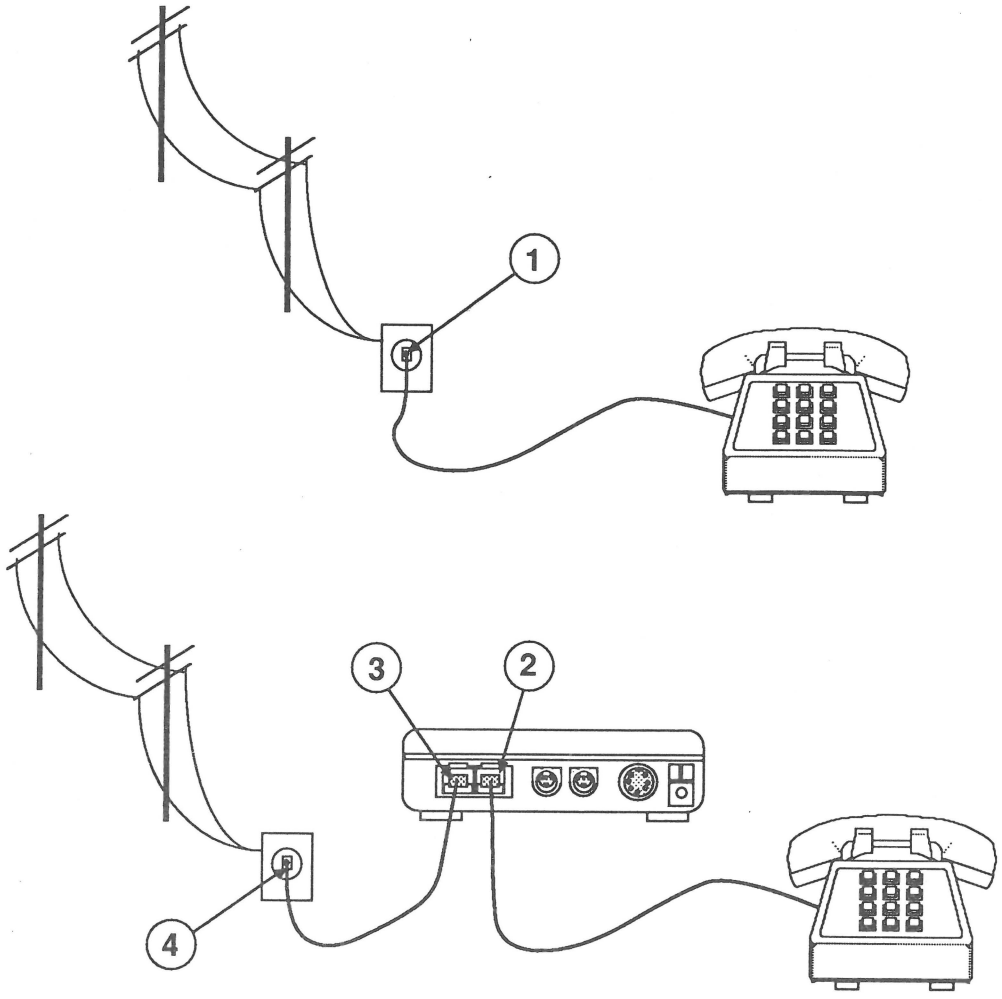


**FIGURE 2**

4. Pick up the telephone receiver and listen for a dial tone. Gently wiggle the modem phone cord at the telephone end, at the cord center, and at the phone jack end.

   If the modem phone cord is good, the phone cord will remain in place and the dial tone will be continuous.

   If the modem cord slips out of either connector, or if the dial tone is not continuous, the phone cord or the main logic board is faulty. Replace the phone cord and retest. If this test fails again, replace the main logic board.

Apple Technical Procedures

# AppleFax Modem

## Section 4 – Troubleshooting

### ❑ CONTENTS


4.2 Introduction
4.2 Using the Symptom Chart
4.2 Using the Troubleshooting Flowchart
4.3 Symptom Chart
4.4 Troubleshooting Flowchart

## ❑ INTRODUCTION

This section provides a symptom chart and a troubleshooting flowchart.

### Using the Symptom Chart

To use the symptom chart, first find the symptom that most nearly describes the problem; then perform the first corrective action on the solution list. If that corrective action does not fix the problem, go to the next one. **If you replace a module and find that the problem remains, reinstall the original module before you go on to the next action.**

If the symptoms displayed by the AppleFax Modem are not listed on the symptom chart, or if the system is not displaying a clearly defined problem, use the troubleshooting flowchart.

### Using the Troubleshooting Flowchart

To use the troubleshooting flowchart, start at the top of the flowchart, answer the questions, and proceed down the chart. When you arrive at a rectangular box containing a list of actions, perform the actions in the sequence listed. Upon completion of each action, test again to see if the action corrects the problem. **If the problem remains, reinstall the original module before you go to the next action.**

The troubleshooting flowchart includes references to notes on the opposite page. These notes provide additional instructions or referrals to other procedures.

## ❑ SYMPTOM CHART

| Problems | Solutions |
|---|---|
| • *Modem lights are not on* | 1. Exchange the power supply.<br>2. Exchange the main logic board.<br>3. Exchange the auxiliary logic board. |
| • *Both lights are on or blinking, or yellow light stays on after power on* | 1. Exchange the main logic board.<br>2. Exchange the auxiliary logic board. |
| • *No sound while the modem is operating* | 1. Move the volume lever toward the front of the modem.<br>2. Exchange the main logic board.<br>3. Exchange the speaker.<br>4. Exchange the auxiliary logic board. |
| • *Poor print quality from fax machines* | 1. Have users select the "Best" option from the Page Setup window.<br>2. Have users select LQ fonts for text-only files (no graphics). |
| • *Poor print quality after file transfers* | – Have users contact the sending AppleFax station to determine what fonts are being used. |
| • *Modem sometimes fails to answer* | – Verify that the AppleFax Modem ROM is revision 1.1 or higher. |

| Problems | Solutions |
|---|---|
| • *When using the "AT" command set, the modem stops sending after a "buffer-full" condition* | – Verify that the AppleFax Modem ROM is revision 1.1 or higher. |
| • *AppleFax Modem application sometimes fails to establish communication with certain facsimile machines* | – Verify that the AppleFax Modem ROM is revision 1.1 or higher. |

## ❑ TROUBLESHOOTING FLOWCHART

**Notes**

1. See "Using FaxTest" in Section 3, Diagnostics.
2. See "Testing the Phone Cord" in Section 3, Diagnostics.
3. If you suspect intermittent problems with the AppleFax Modem, run the tests in the looping mode as described under "Using FaxTest" in Section 3, Diagnostics.
4. See Section 2, Take-Apart.
5. For this test to run properly, AppleTalk must be inactive and both cables must be connected as described under "Hardware Setup" in Section 3, Diagnostics.
6. See "ROM Upgrade" in Section 5, Additional Procedures.

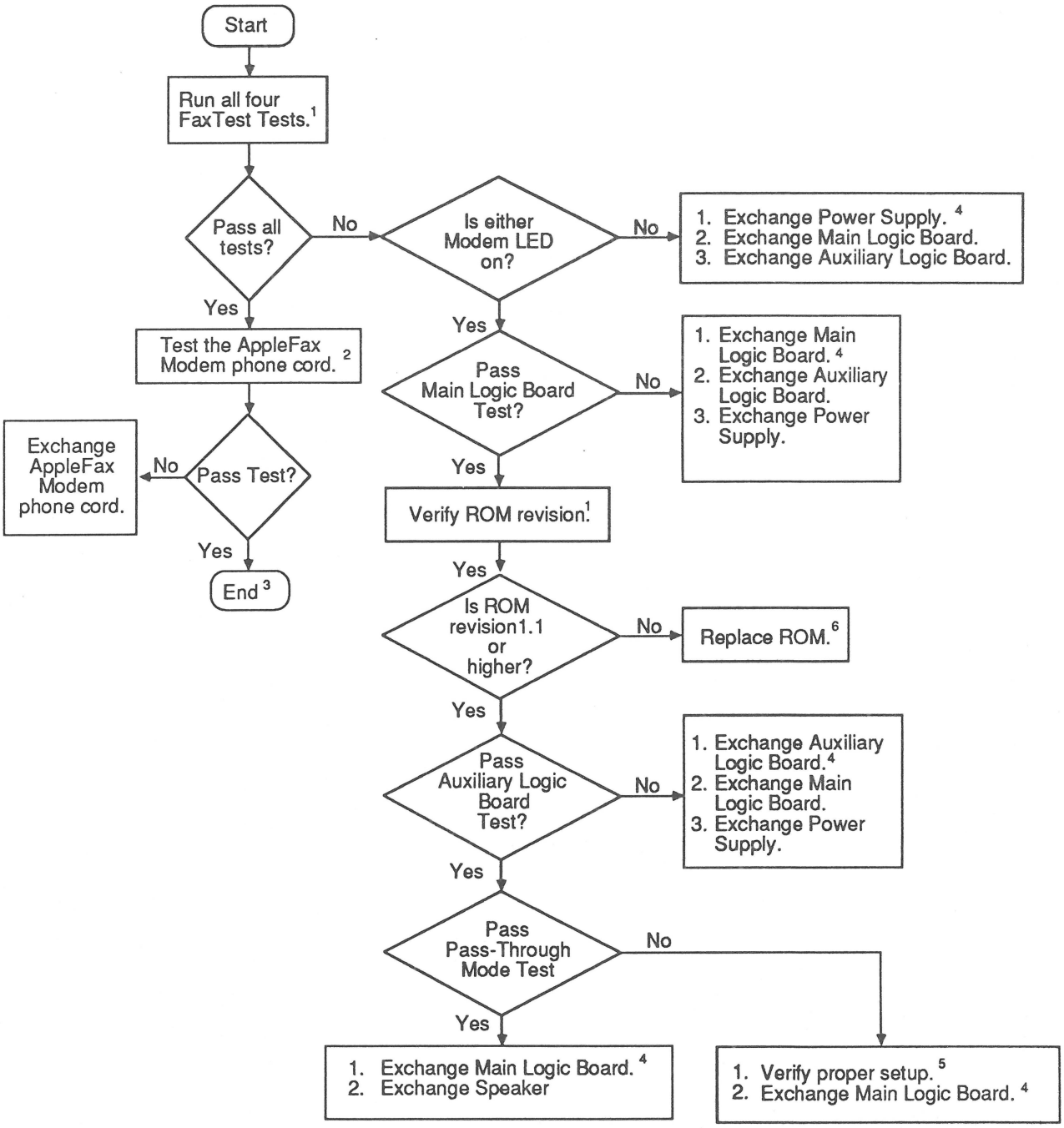
Start
Run all four FaxTest Tests.[1]
Pass all tests?
No
Is either Modem LED on?
No
1. Exchange Power Supply. [4]
2. Exchange Main Logic Board.
3. Exchange Auxiliary Logic Board.
Yes
Test the AppleFax Modem phone cord. [2]
Yes
Pass Main Logic Board Test?
No
1. Exchange Main Logic Board. [4]
2. Exchange Auxiliary Logic Board.
3. Exchange Power Supply.
Exchange AppleFax Modem phone cord.
No
Pass Test?
Yes
End [3]
Yes
Verify ROM revision.[1]
Yes
Is ROM revision1.1 or higher?
No
Replace ROM.[6]
Yes
Pass Auxiliary Logic Board Test?
No
1. Exchange Auxiliary Logic Board.[4]
2. Exchange Main Logic Board.
3. Exchange Power Supply.
Yes
Pass Pass-Through Mode Test
No
Yes
1. Exchange Main Logic Board. [4]
2. Exchange Speaker
1. Verify proper setup. [5]
2. Exchange Main Logic Board. [4]

Apple Technical Procedures

# AppleFax Modem

## Section 5 – Additional Procedures

### ❑ CONTENTS


5.2 ROM Upgrade
5.2 Introduction
5.2 Materials Required
5.2 Installation

## ❑ ROM UPGRADE

**Introduction**

To provide improved compatibility between the AppleFax Modem and various phone systems, the AppleFax Modem ROM has been revised. The new ROM part number is 342-0387-B Revision 1.1.

If the AppleFax Modem does not respond to a ringing telephone line, check that the ROM is revision 1.1 or higher using the FaxTest diagnostic (version 1.2 or higher). Refer to Section 3, Diagnostics, for information on running FaxTest.

**Materials Required**

Upgrade ROM
IC Extractor

**Installation**

1. Locate the AppleFax Modem ROM (Figure 1, #1) on the main logic board at position H7.

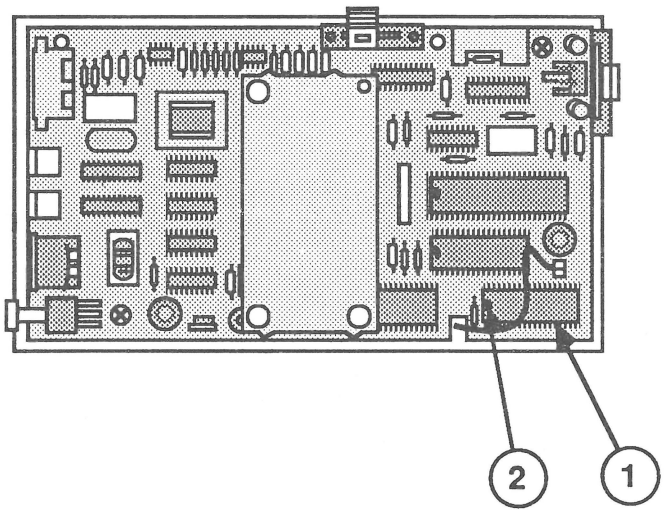


**FIGURE 1**

2. **Carefully** remove the ROM with the IC extractor. If the ROM is difficult to remove, try lifting one side of the ROM slightly and then the other. Continue from side to side until the ROM comes free.

3. Position the new ROM on the socket. The notch on the ROM (Figure 1, #2) must be facing toward the center of the main logic board. Press the ROM firmly into the socket.

Apple Technical Procedures

# AppleFax Modem

## Illustrated Parts List

## ❑ CONTENTS

IPL.3 Main Assembly (Figure 1)

The figures and lists in this section include all piece parts that can be purchased separately from Apple for the AppleFax Modem, along with their part numbers. These are the only parts available from Apple. Refer to your *Apple Service Programs Manual* for prices.

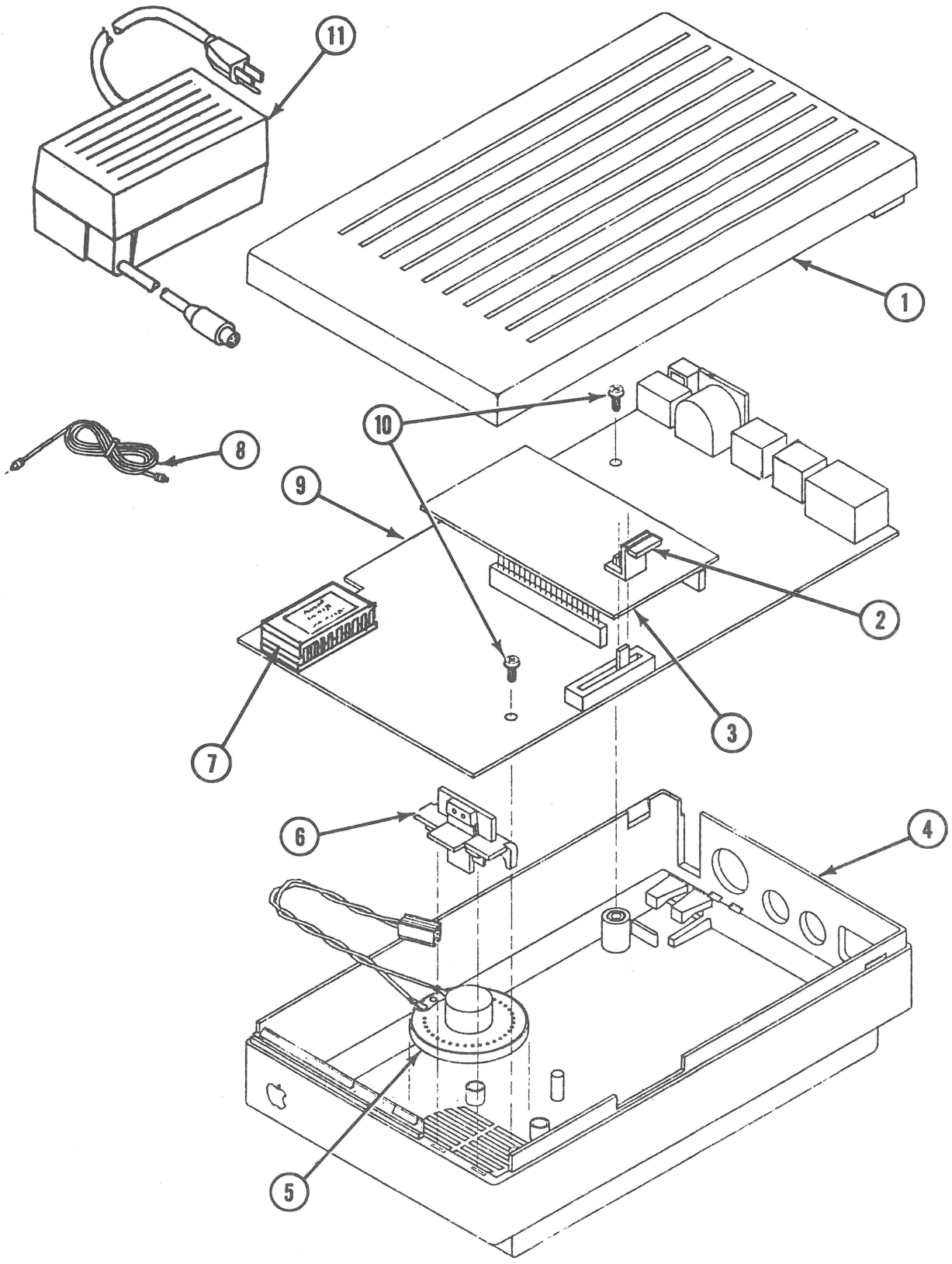


**FIGURE 1**

## ❑ MAIN ASSEMBLY (Figure 1)

| Item | Part No. | Description |
|---|---|---|
| 1 | 630-5413 | Top Case |
| 2 | 815-5042 | Volume Lever |
| 3 | 661-0435 | Auxiliary Logic Board |
| 4 | 630-5412 | Bottom Case |
| 5 | 600-0403 | Speaker |
| 6 | 630-5425 | Light Pipe Assembly |
| 7 | 342-0387 | ROM |
| 8 | 076-8075 | RJ-11 Cable |
| 9 | 661-0433 | Main Logic Board |
| 10 | 462-3100 | Screw, M 3 x .5 x 6 |
| 11 | 699-0130 | Power Supply |

Apple Technical Procedures

# Apple Scanner

## Technical Procedures

## ❑ TABLE OF CONTENTS


**Section 1 – Basics**

1.3 Product Description
1.3 Overview
1.3 How It Works
1.5 Parts of Printer (front view)
1.6 Parts of Printer (rear view)
1.7 Major Assemblies
1.8 Specifications
1.10 Theory of Operation
1.11 Overview
1.12 Power Supply
1.13 Carrier Motor
1.13 CCD PCB
1.14 Main Logic Board
1.16 Preventive Maintenance
1.16 Glass Top
1.16 Underside of Glass

**Section 2 – Take-Apart**

2.3 Top Lid
2.4 Top Case
2.6 Scanning Carriage Assembly—Optical Block
2.17 Optical Inverter Assembly
2.19 Carrier Motor
2.25 Transformer
2.28 Power Supply PCB
2.32 AC Switch Plate and Plug Assembly
2.33 Main Logic PCB

**Section 3 – Diagnostics**

3.2 Introduction
3.4 Test Descriptions
3.4 Accuracy Test
3.4 Image Halftone Test
3.5 Image Grayscale Test
3.5 Image Resolution Test
3.6 Using ScanTest
3.6 Materials Required
3.7 Procedure
3.10 Immediate Mode
3.10 Startup Screen
3.11 Configuration

**Section 4 – Troubleshooting**

4.2 Running Self-Test
4.2 Self-Test Results
4.3 Symptom/Cure Chart

**Section 5 – Additional Procedures**

5.2 Power Supply Fuses
5.4 Main Logic PCB Fuse—FU1 (SCSI Line Fuse)
5.5 Selecting Correct Voltage
5.6 Bulb Replacement
5.6 Remove the Bulb Assembly
5.8 Install the Fluorescent Bulb
5.9 Replace the Bulb Assembly
5.10 Voltage Conversion
5.10 Comparison
5.12 110 Volt to Universal
5.12 Universal to 110 Volt
5.12 Main Logic Board Modification

**Illustrated Parts List**

IPL.3 Miscellaneous Hardware Kit
IPL.5 Parts Location (Figure 1)
IPL.7 Cover Assembly (Figure 2)
IPL.9 Carrier Assembly (Figure 3)
IPL.11 Optical Assembly (Figure 4)
IPL.13 Power Supply and PCB (Main, PS) Assemblies (Figure 5)
IPL.15 Cables (Figure 6)

©Apple Computer, Inc., 1988 and 1989. No portion of this document may be reproduced in any form without the written permission of Apple Computer, Inc.

AppleScan and ScanTest are trademarks of Apple Computer, Inc.

Macintosh, Apple, and the Apple logo are registered trademarks of Apple Computer, Inc.

Apple Technical Procedures

# Apple Scanner

## Section 1 – Basics

### ❑ CONTENTS


1.3 Product Description
1.3 Overview
1.3 How It Works
1.5 Parts of Printer (front view)
1.6 Parts of Printer (rear view)
1.7 Major Assemblies
1.8 Specifications
1.10 Theory of Operation
1.11 Overview
1.12 Power Supply
1.13 Carrier Motor
1.13 CCD PCB
1.14 Main Logic Board
1.16 Preventive Maintenance
1.16 Glass Top
1.16 Underside of Glass

## ❑ PRODUCT DESCRIPTION

### Overview

The Apple® Scanner is an optical image reader designed to support the Macintosh® family of CPUs. The scanner is a 300-dot-per-inch (dpi), 8.5-by-14-inch flat-bed device. Features include halftone support for desktop publishing, Grayscale (1 bit/16 levels), variable scanning resolutions of 75 to 300 dpi, and high-speed data transfer using the built-in SCSI port. The scanner is capable of detecting 16 different shades of gray, from absolute white to absolute black.

The scanner, along with the software application AppleScan™, allows you to make quality reproduction of the items you scan. The scanner is capable of digitizing any document, whether it is a graphics image or a page of text.

### How It Works

To begin a scan, an item (original) is placed on the glass bed of the scanner and covered with the lid. The start of the scan is selected from the AppleScan application on the host computer. The host computer sends commands and parameters to the scanner. These commands and parameters set scanning values within the scanner or instruct the scanner to perform some specific function.

The light of the scanner reflects off the original as the light moves down the scanner bed. The scanner detects variations in the light reflected from the gray shades in the original. The particular shade of gray at any particular point in the original is called its reflection density, or simply density.

As an example, the scanner handles an 8.5-inch-by-11-inch document as an array of more than 8,000,000 dots when scanning at the 300-dpi rate. The array is called a bit map and contains a digitized image of the original document. Depending upon other parameters specified by the user, each dot in the bit map is either black, white, or a shade of gray.

The scanner records in digital format (in memory and on disk) what you instruct it to record with your AppleScan application. Depending on the kind of original you scan and on the purpose you have in mind for the image, the application will record what the scanner detects in one of three ways (called composition types): line art, halftone, or grayscale composition.

Line art composition: each point scanned is recorded as either black or white, depending on a threshold value you set.

Halftone composition: each point scanned is recorded as either black or white, depending on the particular halftone pattern and the contrast and brightness values you set.

Grayscale composition: each point scanned is recorded at the exact level of gray the scanner detects. You can display grayscale composition images on certain monitors. You can convert grayscale composition images to halftone or line art images as well.

After the image is saved, you can use any of several different programs to reproduce the image as a printed version or as a screen display. AppleScan files work with page-layout programs and other graphics programs. You can also print the image directly from the AppleScan application.

The figures on the following pages point out the major assemblies and components of the scanner.

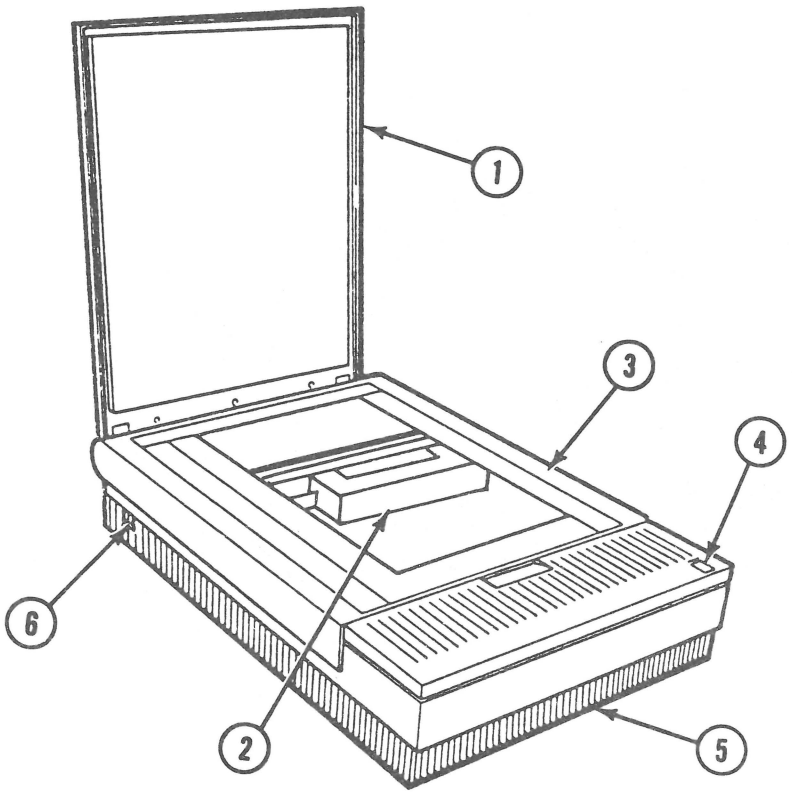


**Front View**

1. Top Lid
2. Optical Block
3. Top Case
4. Scan Switch
5. Bottom Case
6. On/Off Power Switch

**FIGURE 1: PARTS OF PRINTER**

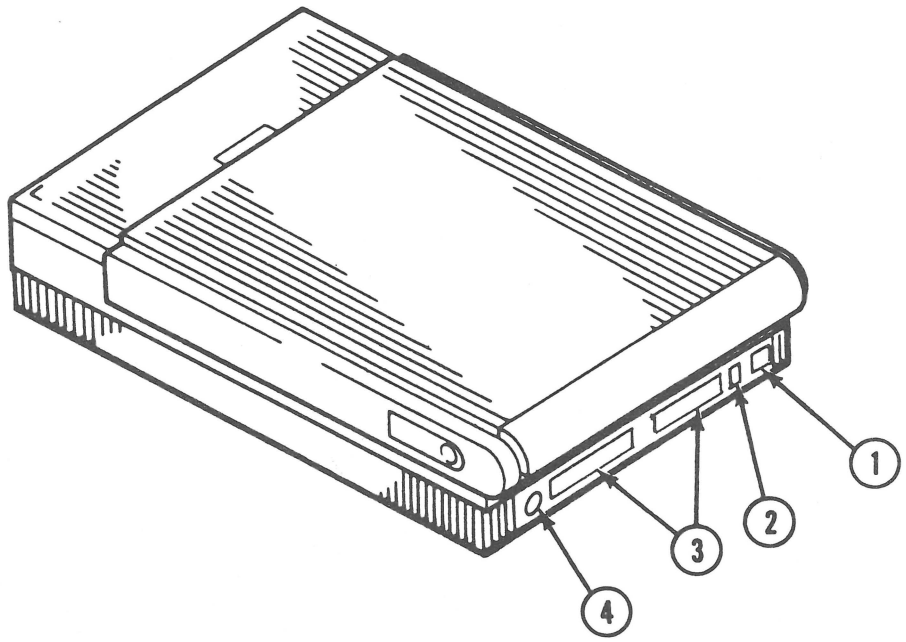


**Rear View**

1. AC Plug
2. SCSI Switch
3. SCSI Connectors
4. Not Used

**FIGURE 2: PARTS OF PRINTER**

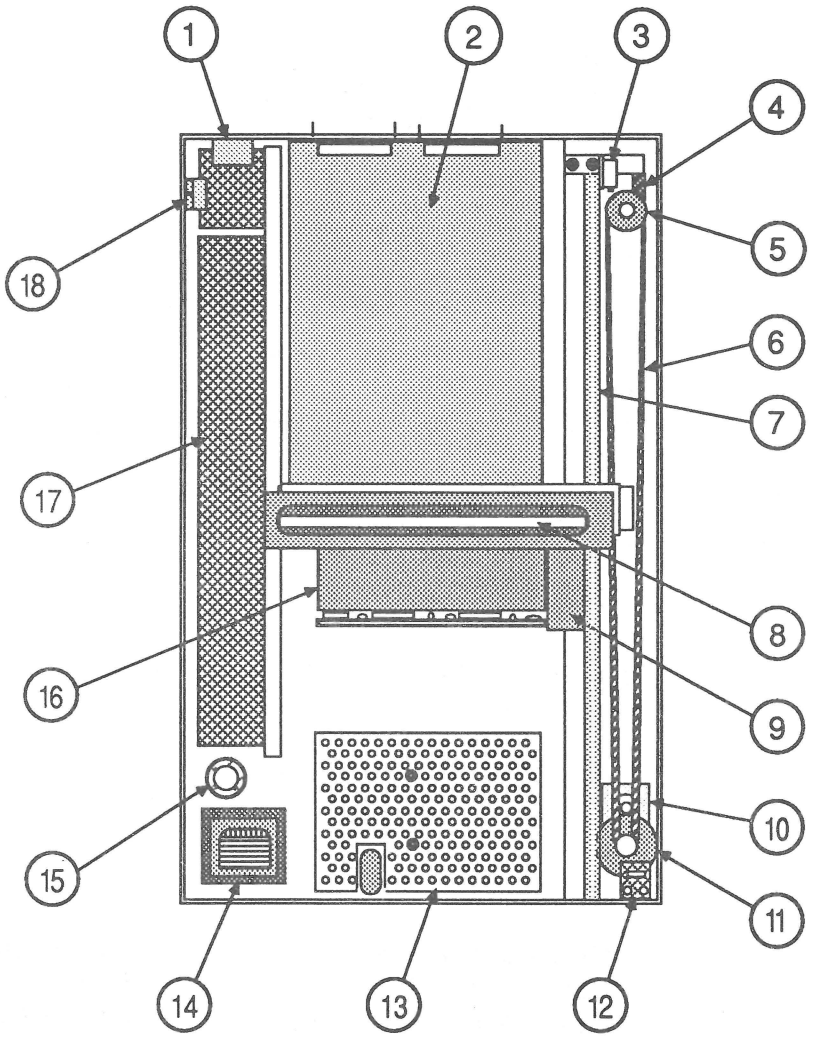


1. AC Power Plug Assembly
2. Main Logic PCB
3. Limit Switch
4. Interlock Switch
5. Pulley
6. Drive Belt
7. Carrier Shaft
8. Fluorescent Lamp
9. Inverter Assembly
10. Pulley Gear
11. Carrier Motor
12. Scan Start Sw PCB
13. Interior Cover
14. Transformer
15. Voltage Selector Switch (Universal Models Only)
16. Optical Assembly
17. Power Supply PCB
18. On/Off Power Switch

**FIGURE 3: MAJOR ASSEMBLIES**

## ❑ SPECIFICATIONS

| | | |
|---|---|---|
| **Dimension (maximum)** | Depth | 545 mm |
| | Width | 340 mm |
| | Height | 110 mm |
| **Weight** | 20 lbs | 9.07 kg |
| **Power supply line voltage** | USA model: | 120 V AC +/-10%<br>58–62 Hz |
| | Universal model (user-selectable): | 100/120/200/220/240 V AC<br>+/- 10% 48–62 Hz |
| **Power Consumption** | Standby | 35 Watts |
| | Scanning | 65 Watts |
| **Paper Size** | Maximum width | 8.50" (215.9 mm) |
| | Maximum length | 14.00" (355.6 mm) |
| **Noise** | Standby | <30 dB |
| | Scanning | <55 dB |
| **Environmental** | Operating temperature: | +10° to +40° C |
| | Storage (6 months): | -40° to +47° C |
| | Transit (period of 72 hours) | -40° to +65° C |
| | Noncondensing humidity: | 20% to 95% RH |
| | Storage (6 months): | |

**Scanning Method**

Flat-bed optical image scanning type. Scans any object laid flat on glass scanning bed. Image document is stationary; scanning mechanism moves.

**Sensor**

A flat-bed scanning charged coupled device (CCD) along with focusing lenses is used to capture line images. The CCD contains 2592 cells to capture the line images at a maximum rate of 300 dpi.

**Scan Time**

Defined as the time to capture and process the image, plus the time to transmit the data to the host computer.

| *SCSI Scan Time (Per Line)* | B/W mode | Halftone or Grayscale mode | B/W Halftone mode |
|---|---|---|---|
| | 5 ms | 8 ms | 16 ms |

**Scanning Density**

Horizontal and vertical density selected independently:

| | |
|---|---|
| B/W or Halftone mode | 300, 285, 270, 255, 240, 225, 210, 200, 195, 180, 165, 150, 135, 120, 105, 100, 85, 75 dpi |
| Grayscale mode | 300, 200, 150, 100, 75 dpi |

## ❑ THEORY OF OPERATION

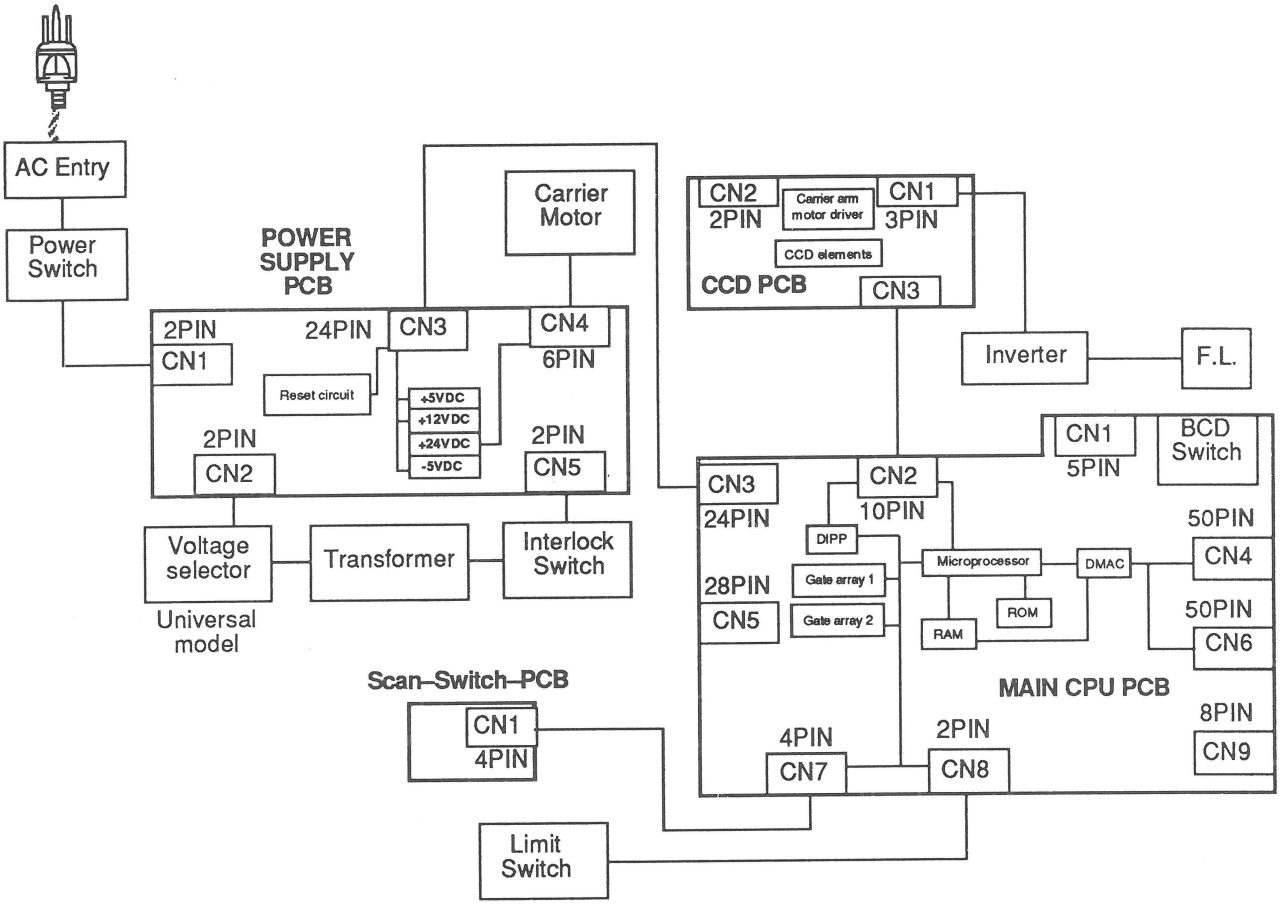


**FIGURE 4**

## Overview

Refer to the block diagram, Figure 4, when reading this section.

Initial reset of the devices is done through the reset circuit on the power supply PCB. This reset circuit assures that all the components on the main logic PCB are in a known state after the power is turned on.

When a software command to start a scan is received, the microprocessor activates the light source (a green fluorescent lamp) in the scanning carrier assembly, and also activates the carrier assembly motor (which sets the carrier assembly in motion).

As the light scans along the document, the reflected light is gathered (through a series of mirrors and lens) into the light-sensitive charged-coupled device (CCD) arrays. Three layers of CCD elements are used for each pixel. The CCD array is on the CCD PCB, which is mounted on the carrier assembly. The array is a 1-pixel-by-2592-pixel matrix, 3 layers deep. Each of the 2592 CCD elements in the top layer holds one picture element (pixel) of a scan line. A scan line is defined as 2552 pixels wide by one pixel (approximately 1/300 inch by 8-1/2 inches). The other 2 layers are used to buffer the picture elements (called a bit map image) before the elements are transferred to the image-processing circuitry.

From the CCD array, the bit map image is transferred to the preprocessing circuit on the main PCB for waveform reformation and then analog-to-digital conversion.

Once the data is in a digital format on the main PCB, the data is processed by the CPU and sent through the interface circuitry back to the host computer where the document is reformed on the host computer screen.

## Power Circuit

The internal power circuit (Figure 5) for the scanner consists of an AC line filter, a voltage selector (for universal models), a power transformer, a switching power supply with protector circuit, and a reset circuit. The AC power passes through the power on/off switch, the noise filter, and then the transformer. The power transformer steps down the voltage and provides 28 V AC. This voltage is fed through the interlock (top cover interlock) to the switching power supply. The switching power supply provides the following DC voltages:

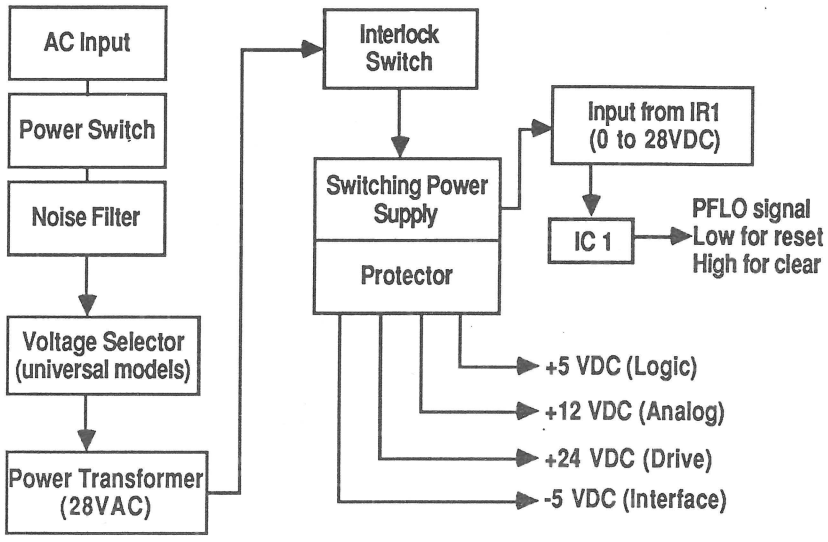


**FIGURE 5**

- +5 VDC used on the main logic board for the logic circuits
- +12 VDC used by the analog scanning circuitry
- +24 VDC used to drive the stepper motor that drives the scanning unit across the glass bed
- -5 VDC used by the SCSI devices

### *Reset Circuit*

The reset circuit (Figure 5) consists mainly of IC1 and supporting circuitry. When the unit is turned on, the reset is held on (low state) while the logic voltage is below 4.75 VDC. This voltage keeps all the devices on the main logic PCB in a reset state until the logic voltage rises above 4.75 VDC. When this voltage level is reached, the reset IC changes states, which clears the reset.

## Carrier Motor

The carrier motor drive circuit (Figure 6) consists of gate array 2 and gate array 1 on the main logic PCB, and IC5 on the power supply board. The drive signals and speed control signals are generated in gate array 2 (IC20). The enable signal is generated in gate array 1 (IC16). These signals are sent through connector CN3 to IC5 on the power supply board. From this device the signals are sent to the 4-2 phase excitation stepping motor through CN4.

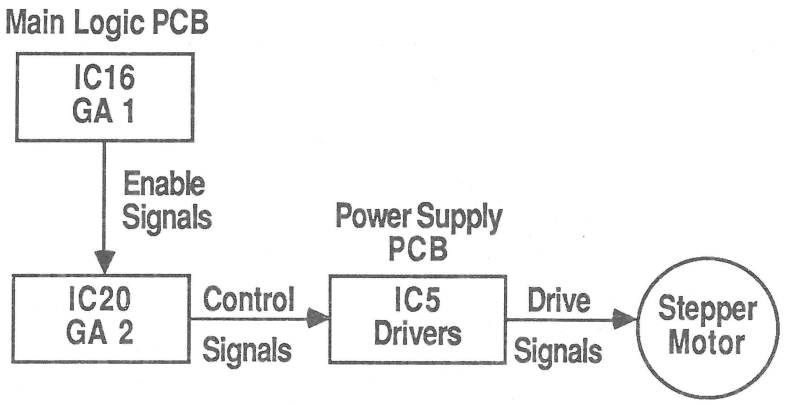


FIGURE 6

## CCD PCB

The charge-coupled device (CCD) PCB (Figure 7) contains the image–sensing logic and the carrier arm motor driver.

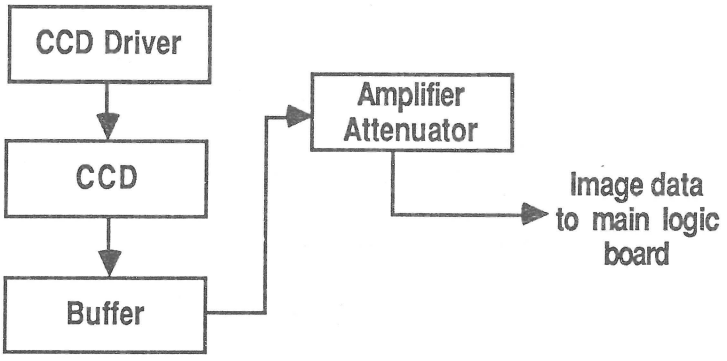


FIGURE 7

*Image Sensing*

As the reflected light falls on the CCD array elements, each element in the top layer is charged. Once charged, the element shifts its charge down to the second layer and then down to the third layer of CCD elements. From the third layer the contents are serially shifted, one pixel at a time, to the image-processing circuitry for cleanup and amplification. The analog charge values pass through an attenuator and then to the main logic board for image processing, distortion correction, and analog-to-digital conversion.

**Main Logic Board**

The main logic board (Figure 8) consists of the following circuits:

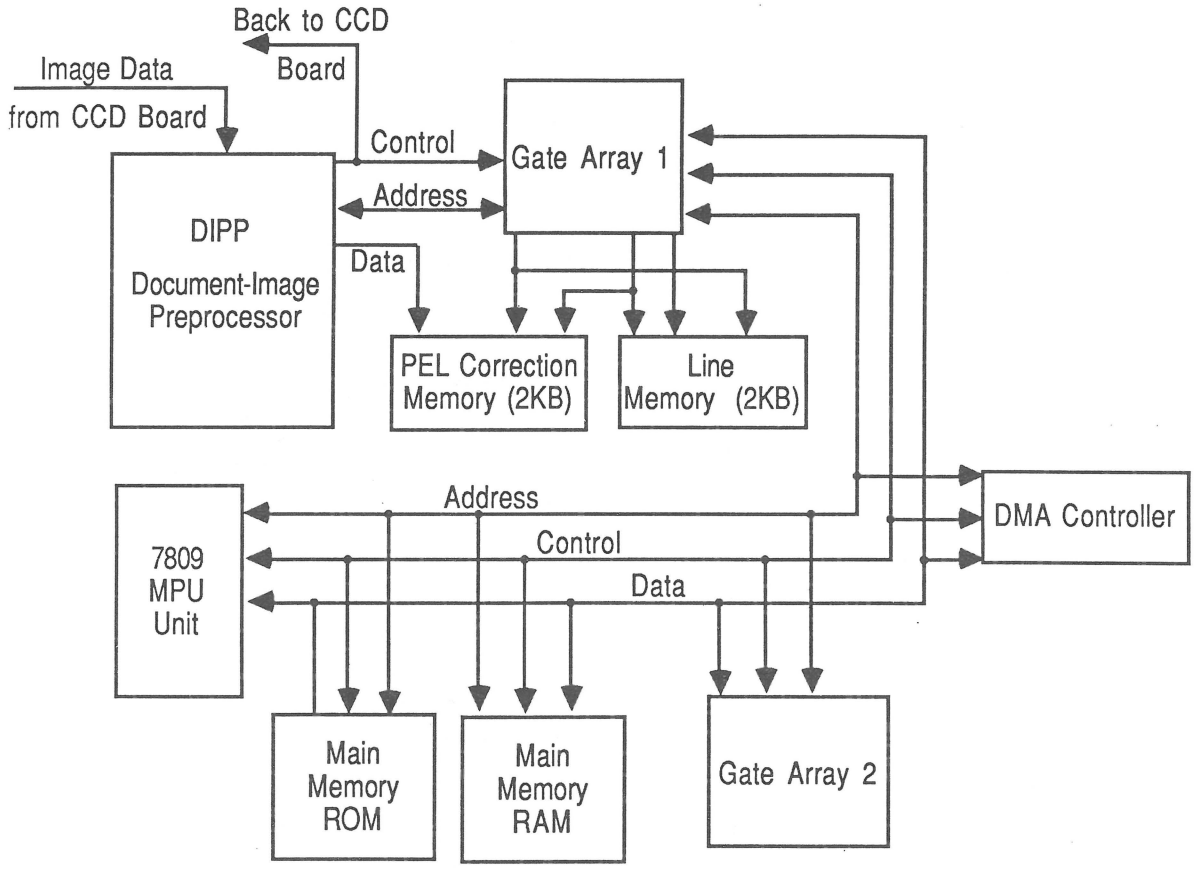


**FIGURE 8**

*Microprocessor*

The scanner uses an 8-bit 7809 microprocessor running on a 12-MHz clock. The microprocessor controls the functions of the gate arrays, the DMAC, and the carriage motor.

### *Main Memory*

The main memory consists of 16K of RAM and 32K of ROM. The ROM contains the firmware to control the scanner. The RAM is used for buffering the image data and also provides the microprocessor with working memory space for parameter information. Of the 16K available, 10K is used specifically to buffer the image data between scanning and transfer to the host computer.

### *Image Processing*

The image-processing circuitry consists of the document-image preprocessor (DIPP), gate array 1, gate array 2, line memory, and the picture element (PEL) correction memory. The DIPP is the main device used in image processing and is supported by the other parts of the circuit.

The DIPP is an image signal processor that takes the analog image data from the CCD array, corrects any distortion, digitizes the corrected analog data, and then transfers the digital data to main memory.

Gate arrays 1 and 2 are used to support the DIPP. Gate array 1 specifically is used to support reduction options by controlling the line memory. If an image requires reduction, it is sent to the line memory for buffering prior to being transferred to the main memory. Some of the other functions that gate array 1 performs are: address generation, memory control, bus interface, gray-scale horizontal-resolution conversion, and CCD control.

Gate array 2 is used for the following functions: direct memory access control, bus arbitration, interrupt control, carrier motor control, address latching, and chip select control.

The line memory and PEL correction memory are two 2-KB RAM chips that are used to buffer data from the DIPP before sending the data to main memory. Image correction and other processing take place in this memory, line-by-line.

### *DMAC*

Once the data is corrected, digitized, and stored in memory, the direct memory access controller (DMAC) circuit, working in conjunction with the CPU, controls the transfer of image data to the host computer. While working along with the microprocessor, this circuit executes a faster data transfer.

## ❑ PREVENTIVE MAINTENANCE

### Glass Top

To clean the glass top,

1. Make sure the power is off.
2. Lift the lid to the open position.
3. Wipe the glass with water or a light detergent and a clean, soft, lint-free cloth. Do not use benzene, thinner, or any other volatile chemicals.

### Underside of Glass

To clean the underside of the glass,

1. Remove the lid and the top cover.
2. Clean the underside of the glass as in step 3 above.

Apple Technical Procedures

# Apple Scanner

## Section 2 – Take-Apart

### ❑ CONTENTS


2.3 Top Lid
2.4 Top Case
2.6 Scanning Carriage Assembly—Optical Block
2.17 Optical Inverter Assembly
2.19 Carrier Motor
2.25 Transformer
2.28 Power Supply PCB
2.32 AC Switch Plate and Plug Assembly
2.33 Main Logic PCB

## ❑ TOP LID

The following take-apart procedures were done using references to left side, right side, front, or back. It is important that you use the same reference when performing these procedures. Figure 1 below has been labeled to reflect the orientation used for most of the graphics used in these procedures. If a view is changed or reversed, the graphic will show the new orientation.

### Remove

To remove the top lid:

1. Lift the lid up all the way to 90° (Figure 1, #1).

2. Press the two indented clips near the bottom of the lid on both sides (Figure 1, #2). As you press in the clips, gently pull up on the lid and remove it.

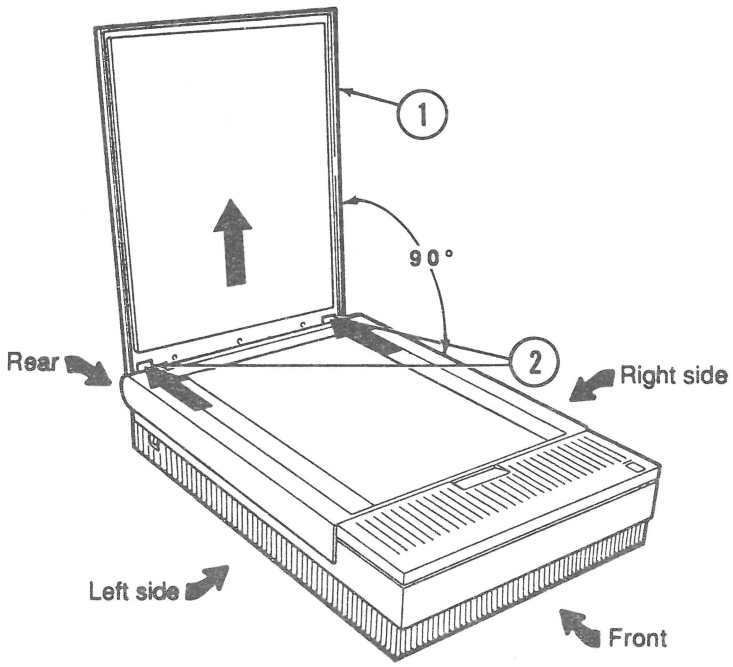


**FIGURE 1**

### Replace

Line up the slots on the lid with the tabs on the scanner, and gently push the lid down so that the tabs fit into the slots. Also make sure that the indented clips snap into the open cutouts.

## ❑ TOP CASE

**Remove**

To remove the top case:

1. Remove the top lid.

2. Locate the three screws (Figure 2, #1) that are along the top back of the scanner, and unscrew them half way.

   ***Note:*** These screws do not come out all the way. Unscrewing them until they are loose is enough to release the top case.

3. Using both hands, grasp the top case from the back (where the screws were removed, Figure 2, #2) and carefully pry the top case loose.

4. Swing the case up and forward toward the front of the scanner (Figure 2, #3).

5. When the case gets to the top of the swing (90°), remove the scan switch cable from the LED circuit board (Figure 2, #4) located at the right-front side of the case.

6. Continue pulling forward and up to remove the case completely.

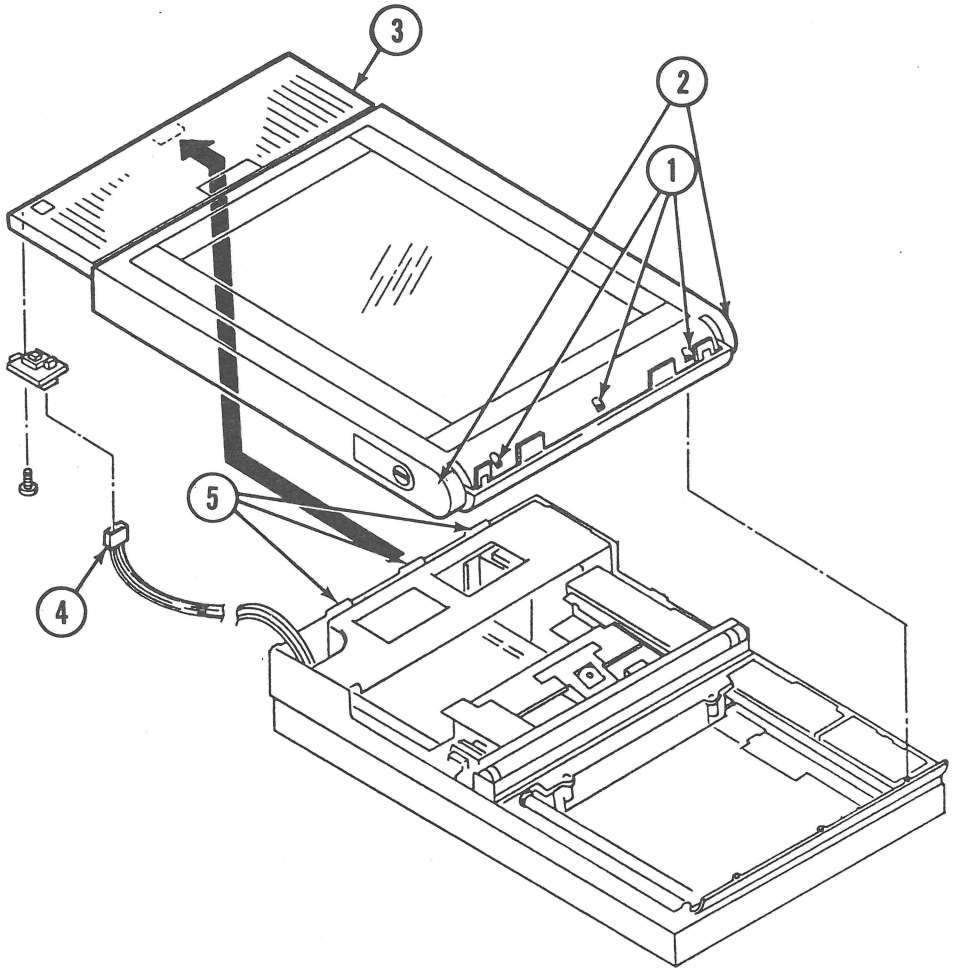


**FIGURE 2**

**Replace**

1. Stand the top case 90° to the front of the bottom case. Align the front of the top cover with the front of the bottom cover, making sure that the three tabs (Figure 2, #5) align with the three slots in the bottom case. Also, make sure the LED is aligned with the cutout on the bottom case. Hold the case in this position until the next step is performed.

2. Attach the scan switch cable to the PCB on the right front side of the case (Figure 2, #4).

3. Slowly lower the top case, swinging it toward the back end of the bottom case until the top fits completely on the bottom case.

4. Secure the top cover with the three screws (Figure 2, #1).

## ❑ SCANNING CARRIAGE ASSEMBLY—OPTICAL BLOCK

**Remove**

The carriage assembly consists of the optical block, light, drive belt, and shaft. To remove the optical block:

1. Remove the top lid and the top cover.

2. Remove the light assembly by first unscrewing the Phillips screw (Figure 3, #1). This screw does not come out, but it has to be completely loose.

3. Raise the wire hook (Figure 3, #2) on the right side of the optical block to a horizontal position and then pull it straight out. The light assembly (Figure 3, #3) will disengage from the electrical connector (Figure 3, #4) and will slide out.

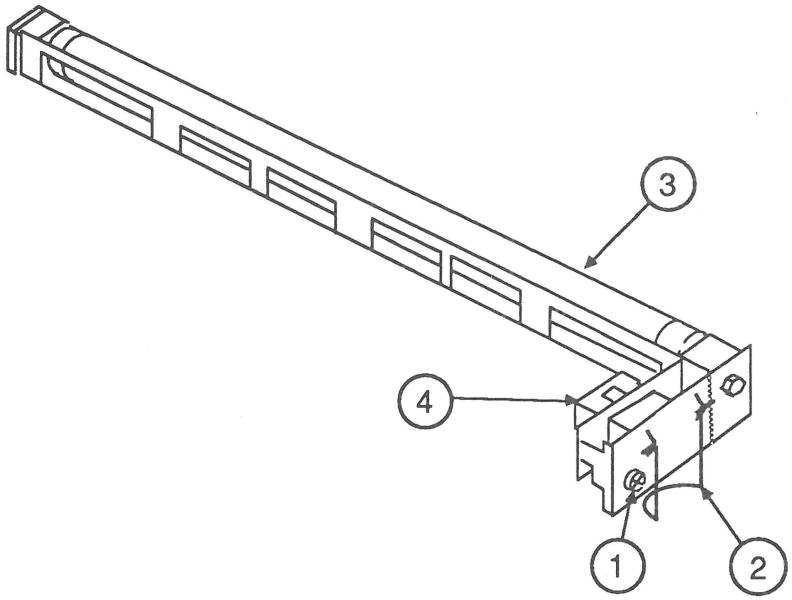


**FIGURE 3**

4. Position the optical block in the center of the scanner so that the left side of the optical block is aligned with the cutout on the left-side rail (Figure 4).

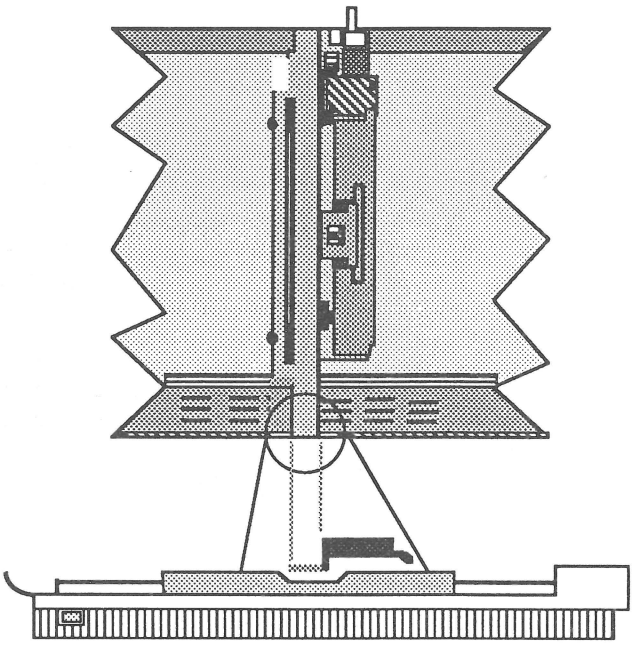

**FIGURE 4**

5. Remove the two screws (Figure 5, #1) holding the front plate (Figure 5, #2).

   ***Note:*** The screw on the left side (by the transformer) is secured to the bottom of the case. To get to it, you will need a long Phillips screwdriver.

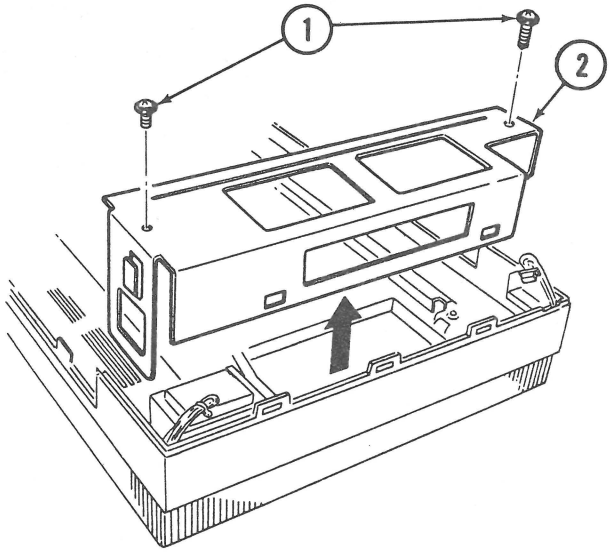


**FIGURE 5**

6. Lift out the front plate.

7. Remove the two screws (Figure 6, #1) that secure the back-side shaft bracket. The bracket can then be moved slightly to the side.

8. Remove the two screws (Figure 6, #2) that secure the front-side shaft holder bracket. This bracket is removable.

9. Loosen the screw (Figure 6, #3) on the carrier motor plate that holds the belt pulley tight.

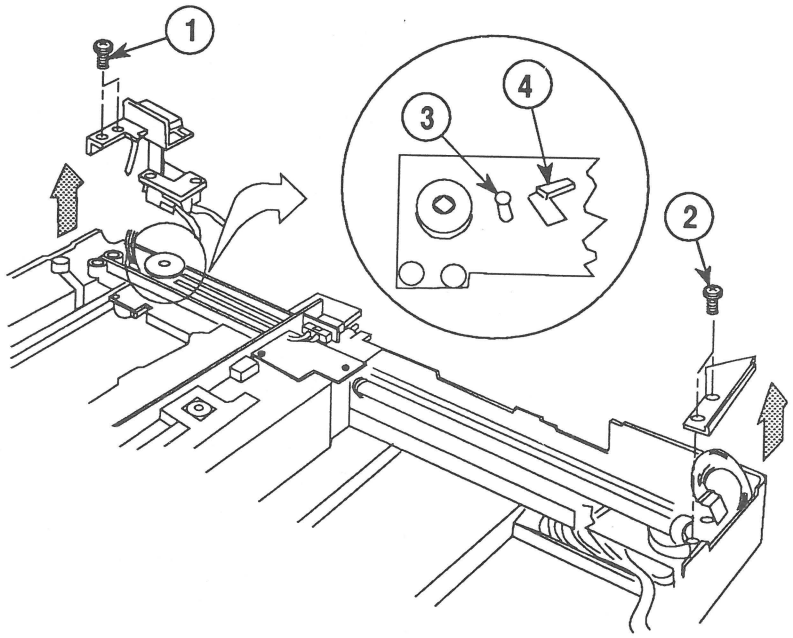


**FIGURE 6**

10. Loosen the tension on the belt by swinging the pulley lever (Figure 6, #4) toward the front, and remove the belt from the pulley gear.

11. Gently lift up on both sides of the shaft. Be careful not to raise the optical block too high. When the shaft clears the bracket mounts, pull the whole assembly toward you (toward the right side of the unit). The left side of the scanner assembly is riding on a rail. The movement will dislodge the assembly from the rail (Figure 7, #1). Once the optical block is loose from the rail, do not try to lift it up all the way until after you do the next step.

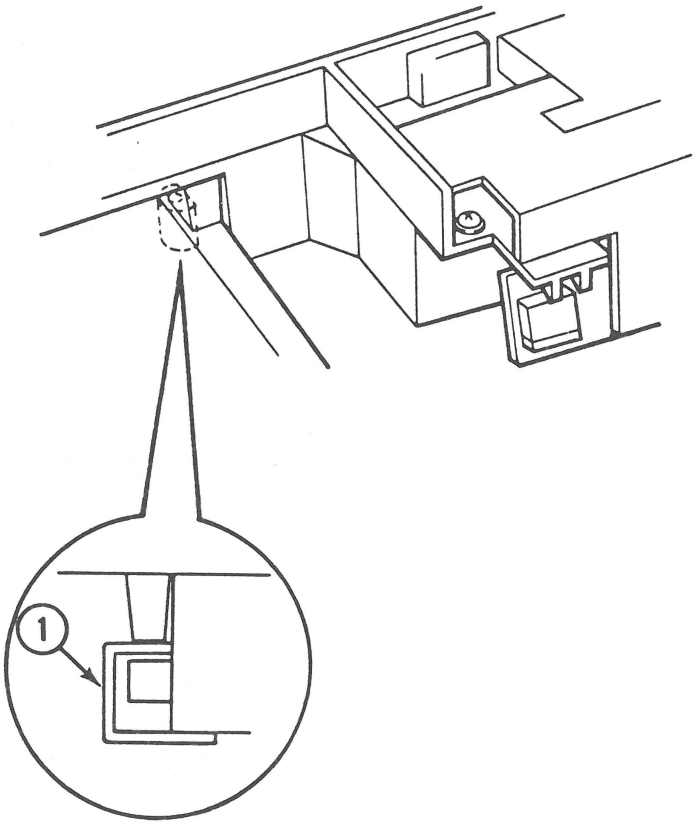


**FIGURE 7**

12. Disconnect the flexible cable (Figure 8, #1) from connector CN1 (Figure 8, #2) of the CCD PCB by gently pulling down on the bottom part of the connector (Figure 8, #3) and then pulling out the cable (Figure 8, #4). Remove the cable by sliding the cable to the open side.

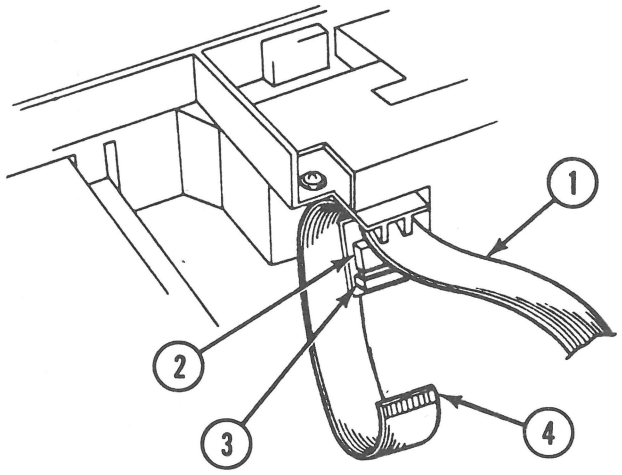


**FIGURE 8**

13. Remove the drive belt (Figure 9, #1) from the forward pulley gear (Figure 9, #2) and from the rear pulley (Figure 9, #3).

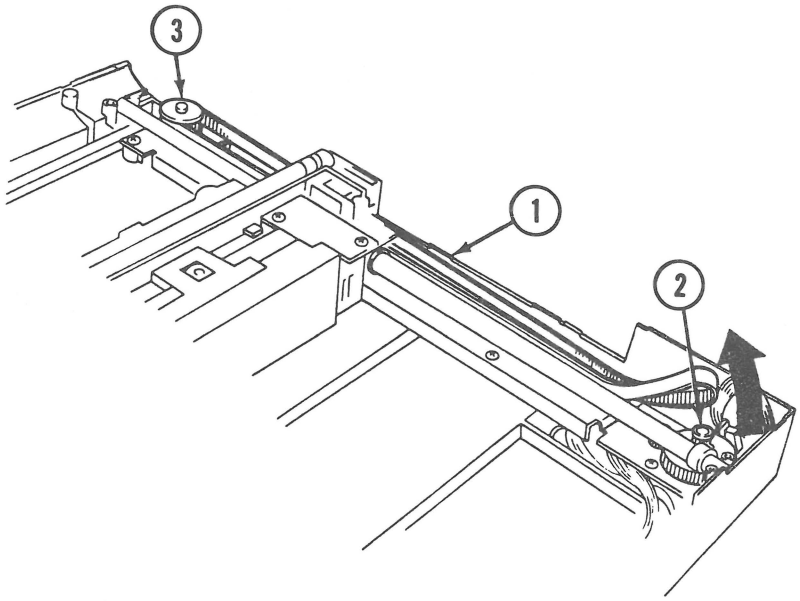


**FIGURE 9**

14. Lift out the optical assembly (Figure 10, #1).

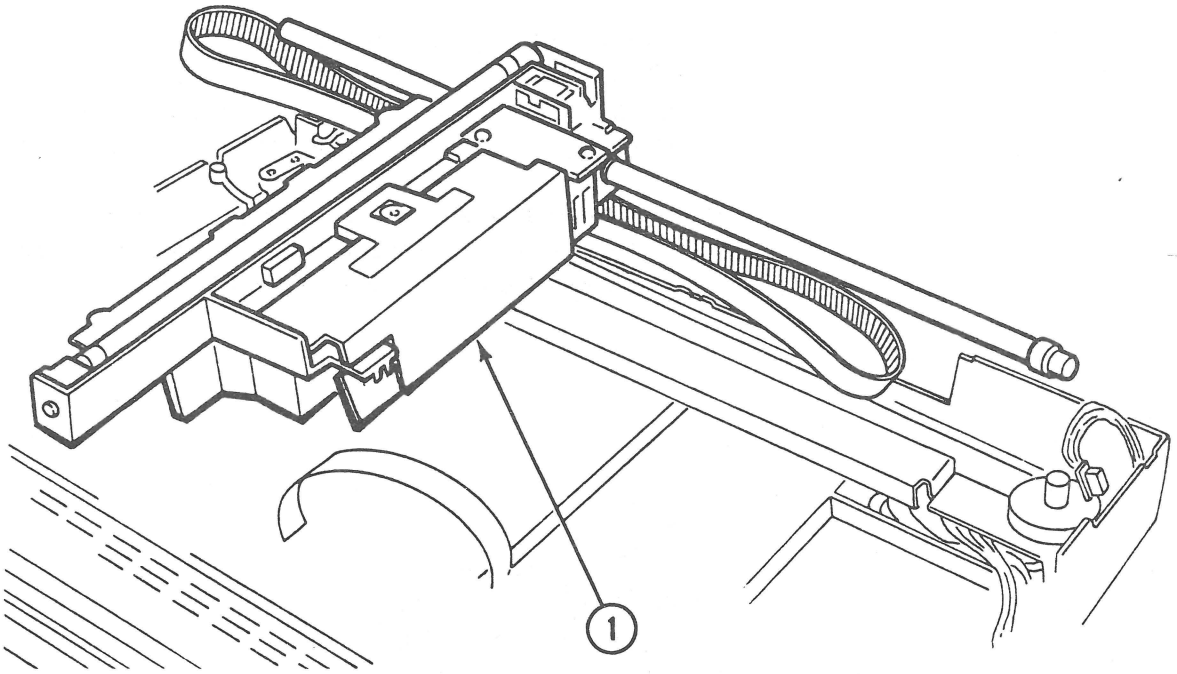


**FIGURE 10**

15. Remove the shaft from the optical assembly by pulling it out from right to left (Figure 11, #1).

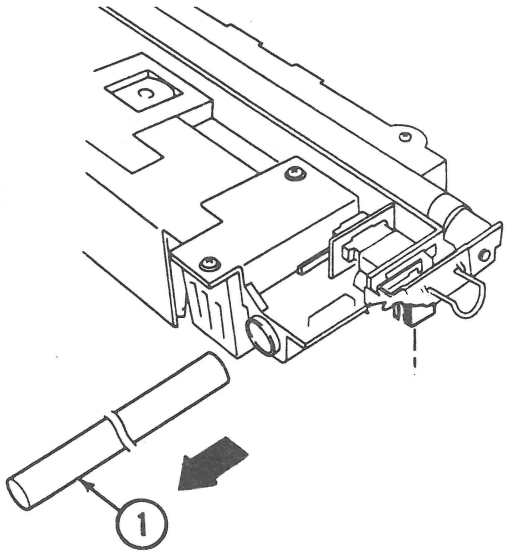


**FIGURE 11**

16. Remove the belt from the optical assembly as follows:

    a) Remove the clip (Figure 12, #2) that covers where the belt (Figure 12, #3) is attached to the optical block. Use a flat-blade screwdriver, if necessary, to pry the clip loose.

    b) Pull the belt straight out. The plastic slot (Figure 12, #4) is molded with ridges that match the grooves on the belt (Figure 12, #3).

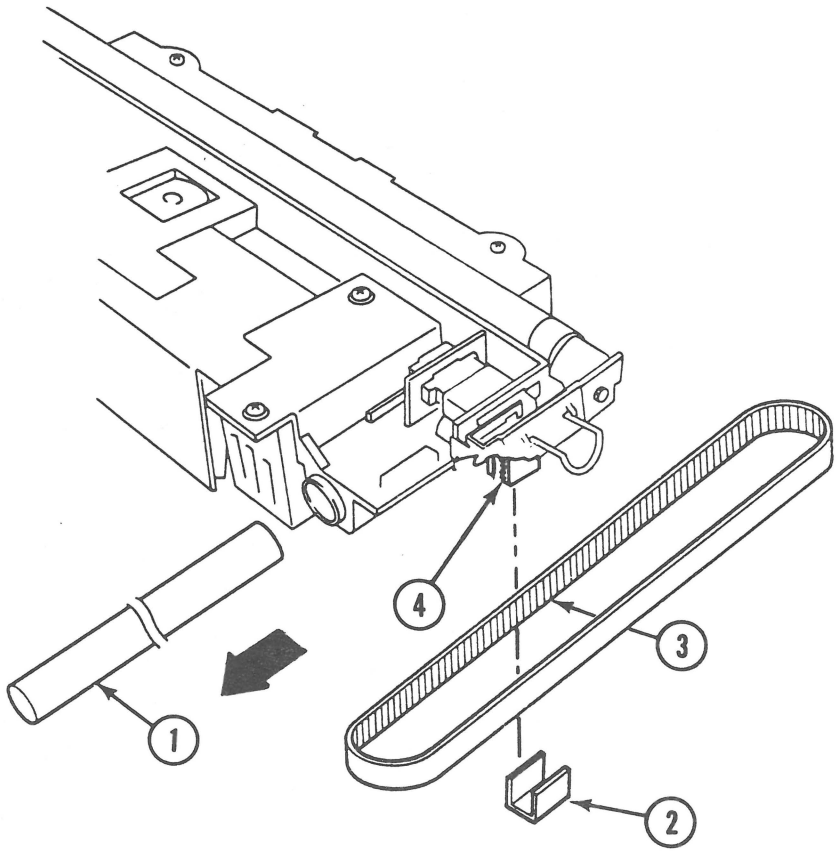


**FIGURE 12**

**Replace**

1. Attach the belt to the optical block. The grooves in the belt (Figure 12, #3) fit into the molded grooves on the block (Figure 12, #4). The belt is then secured with the clip (Figure 12, #2).

2. Turn the optical block to the upright position and insert the shaft into the brass bushing, from left to right.

3. Lay the whole optical assembly on the top of the scanner bed and attach the flexible cable to connector CN1 (Figure 13, #1) on the CCD PCB. Make sure the cable (Figure 13, #2) is looped around the connector.

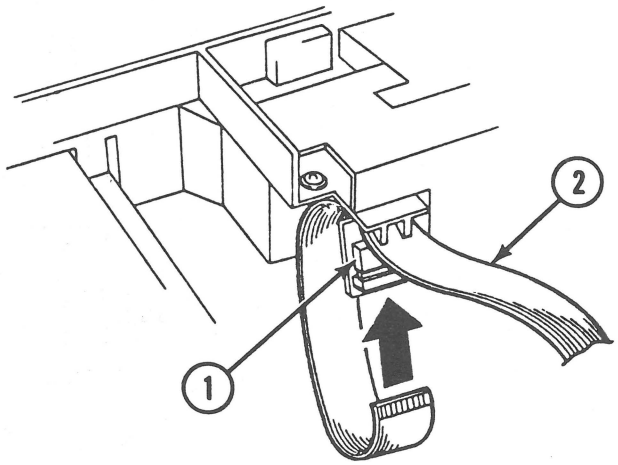


**FIGURE 13**

4. Position the optical block across the center of the the scanner, lining up the left side of the optical block with the cutout on the left-side rail.

5. Slip the left side of the optical block under the left rail while making sure that the block engages under the rail (Figure 14, #1).

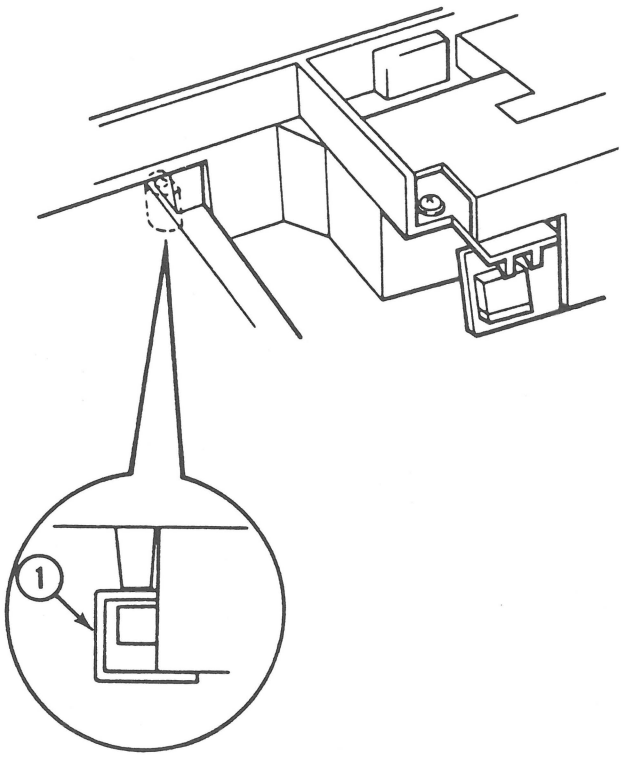


**FIGURE 14**

6. Lower the right side of the optical block into the scanner unit, making sure you get the shaft into the shaft holders on both the front and back ends.

7. Connect the belt around the gear pulley, toward the front of the scanner.

8. Connect the other end of the belt over the other pulley. (If this pulley is not free so that you can easily place the belt on it, you will have to loosen the screw on the pulley bracket to get the pulley to move.)

9. Once the belt is on both pulleys, pull back on the rear pulley to increase the tension on the belt, and tighten the screw on the rear pulley bracket.

10. Put the two shaft plates on each end of the shaft and secure them with the four screws (Figure 15, #1). Make sure that the scanner switch cable and connector are sticking out at the front corner of the front plate, so that the connector can be attached later to the top case.

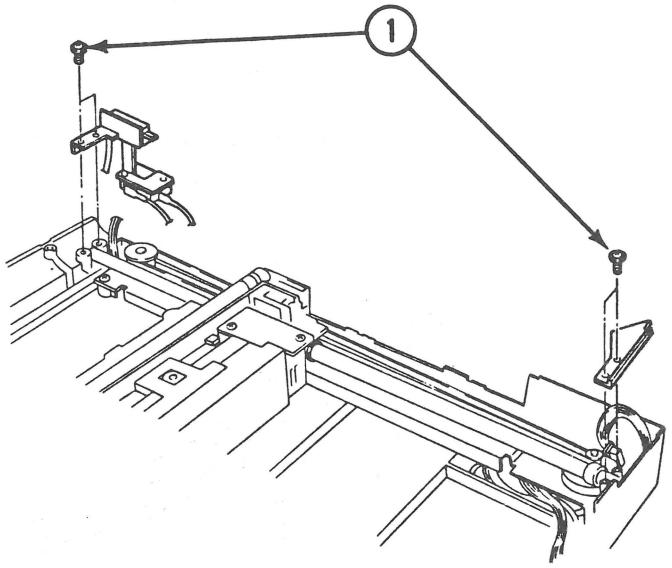


**FIGURE 15**

11. Put the front plate back on and secure the plate with two screws.

12. Slide the light and light holder (Figure 16, #1) onto the optical block, and push the assembly all the way in. Make sure that the light holder assembly's bottom edge slips under the tab on the optical block slot (Figure 16, #2).

13. Engage the electrical connector (Figure 16, #3) by screwing the Phillips screw (Figure 16, #4) all the way in. (This action pulls the two connectors together.)

14. Attach the top cover and then the lid.

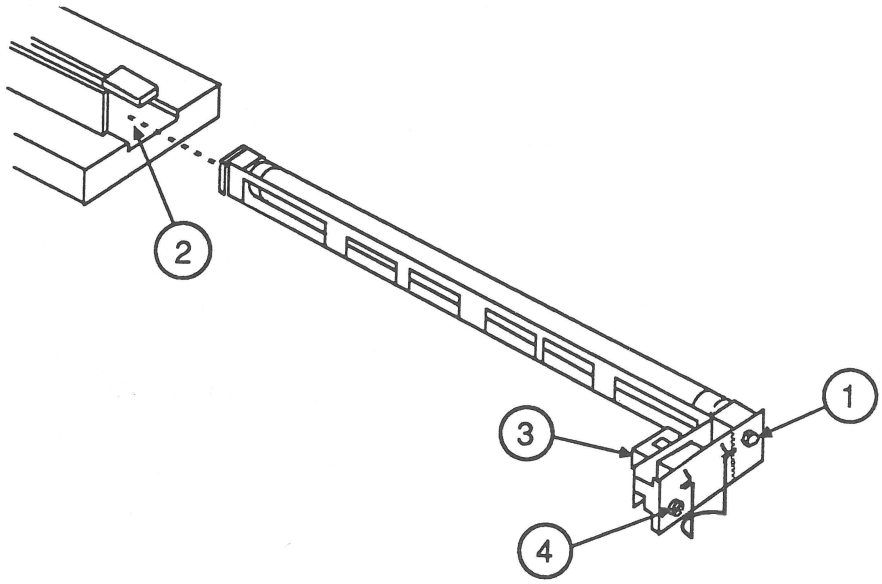


**FIGURE 16**

## ❑ OPTICAL INVERTER ASSEMBLY

**Remove**

To remove the inverter assembly:

1. Remove the lid and top cover.

2. Remove the optical block.

   ***Note:*** You do not have to remove the drive belt from the optical block in order to remove the inverter.

3. Put the optical block down on a flat surface.

4. Using both hands, grasp the top lid (Figure 17, #1) of the optical block by putting your index fingers on the front part of the top lid (Figure 17, #2) and your thumbs on the back part of the lid (Figure 17, #3).

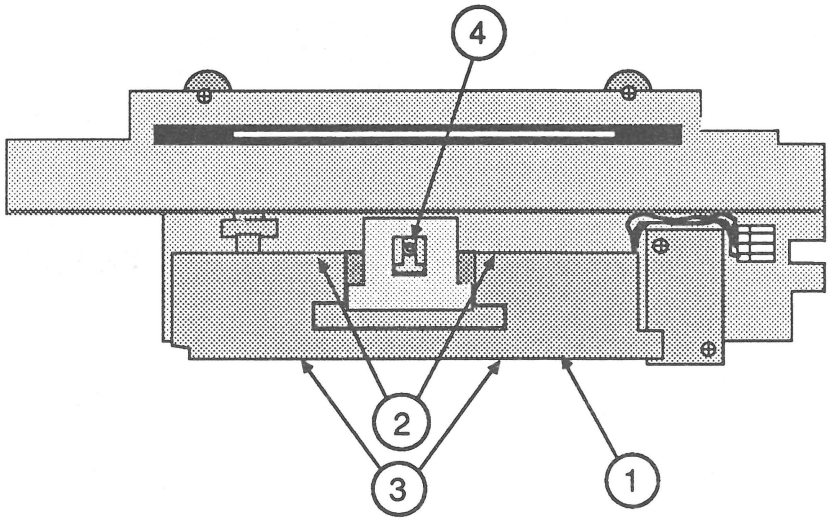


**FIGURE 17**

5. Gently pry up and out on the back part of the lid with your index fingers, using your thumbs for leverage, until the front part of the lid pulls up from the optical block, and the entire lid comes off.

***CAUTION:*** *In the middle top of the optical block is a set screw (Figure 17, #4). This screw holds the CCD chips and mirror alignment. Do not attempt to loosen this screw. If the screw is loosened, the entire optical block must be replaced.*

6. Unplug connector CN1 (Figure 18, #1) from the CCD PCB.

7. Unscrew the two screws (Figure 18, #2) that hold the inverter assembly. As you remove the last screw, the inverter assembly will come off.

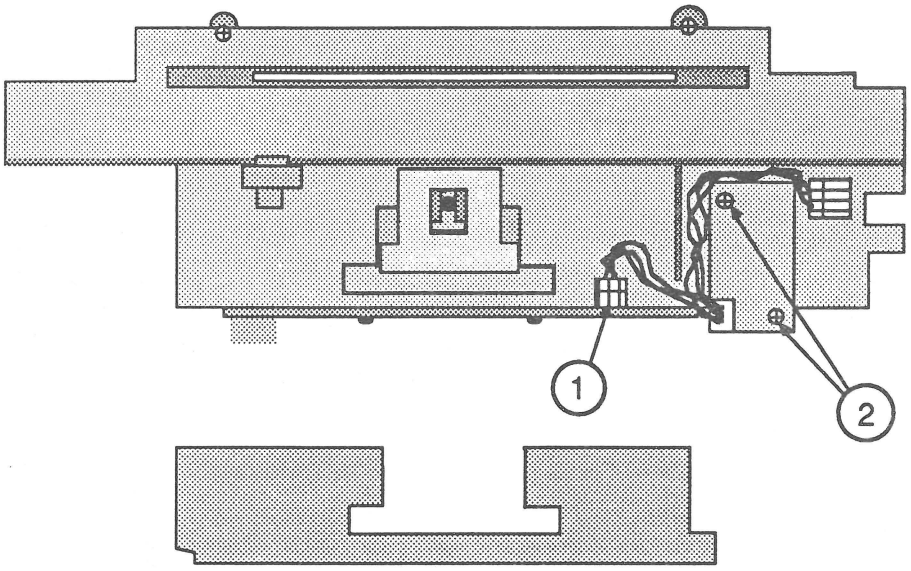


**FIGURE 18**

**Replace**

To replace the inverter assembly:

1. Install the new inverter assembly and secure it with the two top screws (Figure 18, #2).

2. Plug the connector into connector socket CN1 (Figure 18, #1) on the CCD PCB.

3. Replace the top lid by aligning it in place and pressing down until it snaps into place.

## ❑ CARRIER MOTOR

**Remove**

To remove the carrier motor:

1. Remove the lid and top cover.
2. Remove the optical carriage assembly.
3. Remove the two screws from the front inside cover (Figure 19, #1), and remove the cover.
4. Remove the left guide rail (Figure 19, #2) by removing the three screws that secure it to the case. This action will allow access to the power supply board.

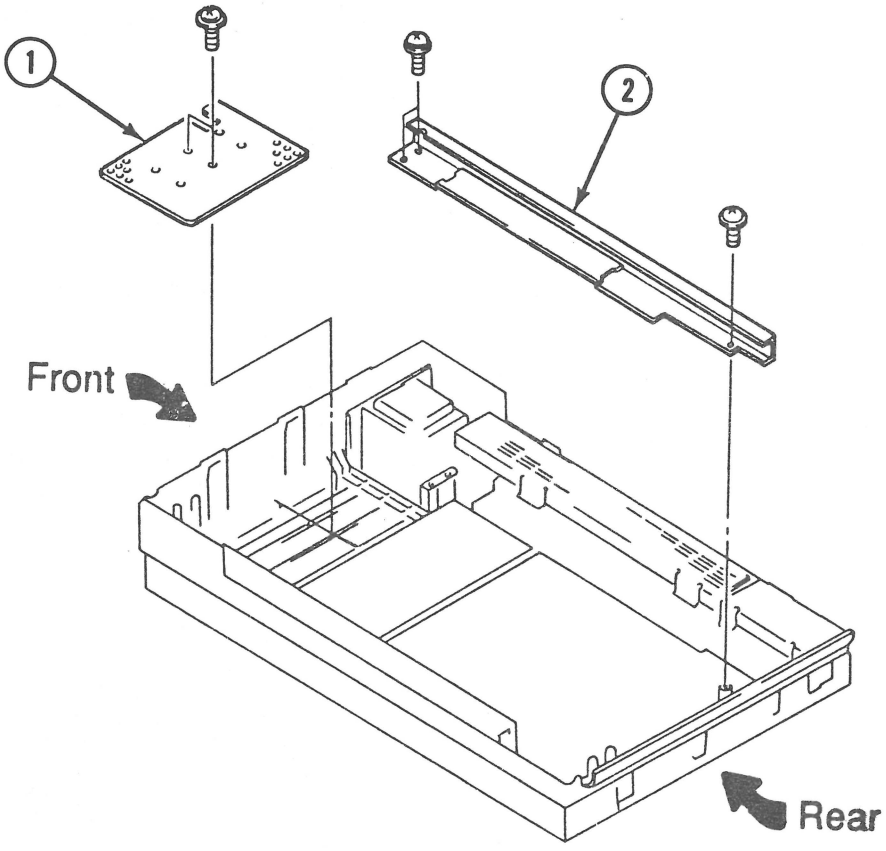


**FIGURE 19**

5. Remove the pulley bracket on the right side (Figure 20, #1) by removing the four screws with black washers (Figure 20, #2).

6. Locate the metal ground strap (Figure 20, #3) that comes from the left side of the case and is attached to the pulley bracket. Remove the screw (Figure 20, #4). The bracket will not come out.

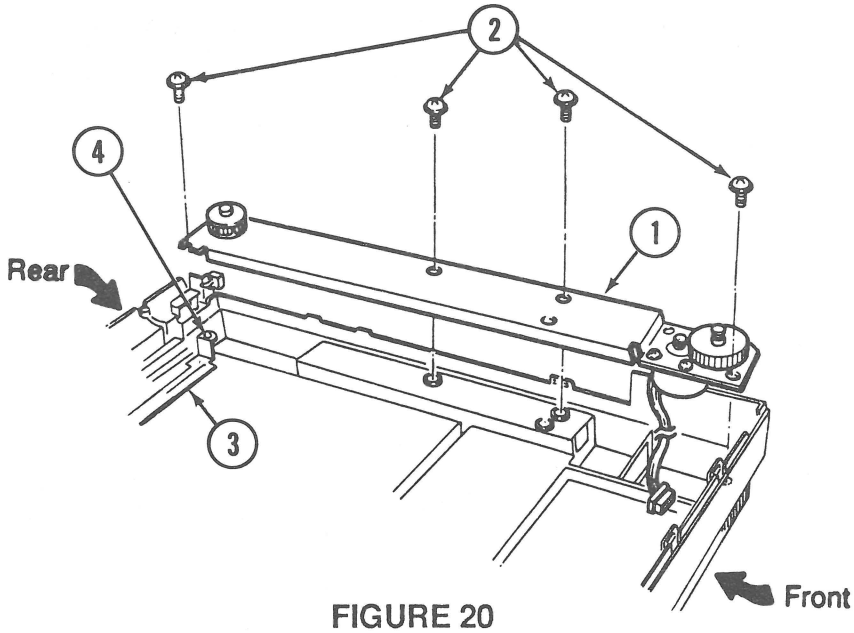


FIGURE 20

7. Carefully pull out the carrier motor connector that is connected to CN4 (Figure 21, #1) on the power supply board (Figure 21, #2). Then remove the wires from the wire harness clips.

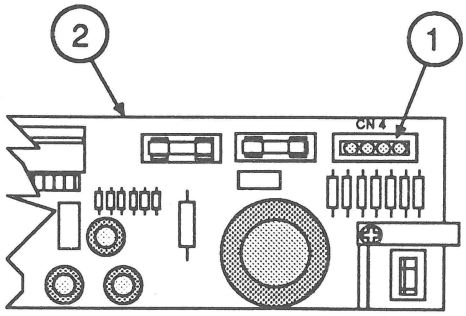


FIGURE 21

8. Remove the pulley and carrier motor plate assembly (Figure 22, #1) by lifting them out of the bottom case.

9. Using a jeweler's screwdriver, remove the E-clip and washer (Figure 22, #2) from the gear pulley and pull off the gear pulley.

10. Remove the three screws (Figure 22, #3) that hold the carrier motor to the carrier plate assembly and remove the motor.

    ***Note:*** You can also remove the pulley at this time by removing the large E-clip (Figure 22, #4), and pulling off the pulley. Also, if the pulley tension spring (Figure 22, #5) needs to be replaced, you can reach it on the bottom of the pulley bracket.

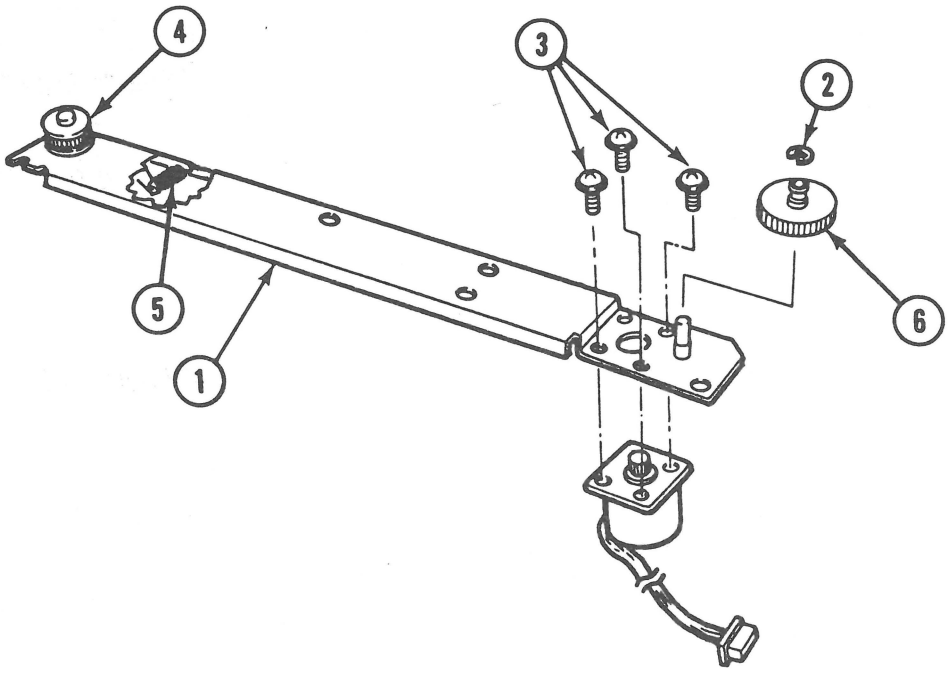


**FIGURE 22**

**Replace**

To replace the carrier motor:

1. Place the motor on the underside of the carrier plate so that the wires face toward the front of the case. Attach the motor with the three screws (Figure 22, #3). Tighten the screws.

2. Place the gear pulley (Figure 22, #6) on its shaft and make sure that the gear on the pulley engages with the gear on the motor shaft.

3. Replace the plastic washer (Figure 23, #1), flange side (Figure 23, #2) down, on the gear pulley shaft (Figure 23, #3) and secure the washer with the small E-clip (Figure 23, #4).

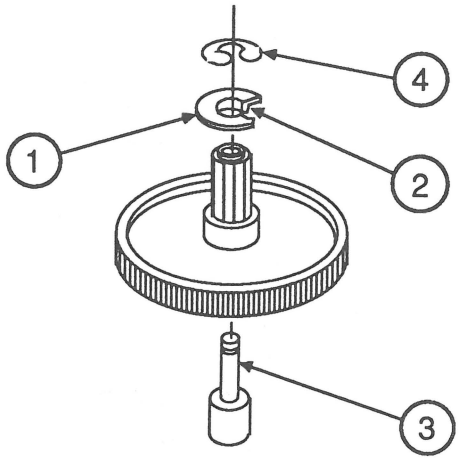


**FIGURE 23**

4. If the pulley (Figure 24, #4) was removed, replace it at this time, securing it with the large E-clip.

5. Place the pulley and carrier motor assembly (Figure 24, #1) back into the bottom case. Use the four screws with the black washers (Figure 24, #2) to secure the motor assembly. Make sure that the interlock switch assembly is loose but tucked in along the case, and that the carrier motor assembly fits into the middle part of the switch assembly.

6. Connect the connector from the motor to CN4 on the power supply board. Guide the wires along the front bottom of the case and through the harness clips.

7. Replace the ground strap (Figure 24, #3) and secure it with a screw.

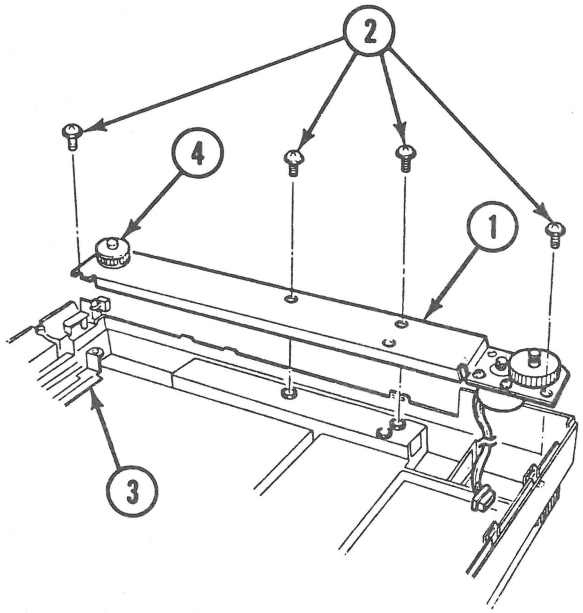


**FIGURE 24**

8. Replace the left rail (Figure 25, #2) and secure it with the two screws.

9. Replace the inside cover (Figure 25, #1) and secure it with two screws.

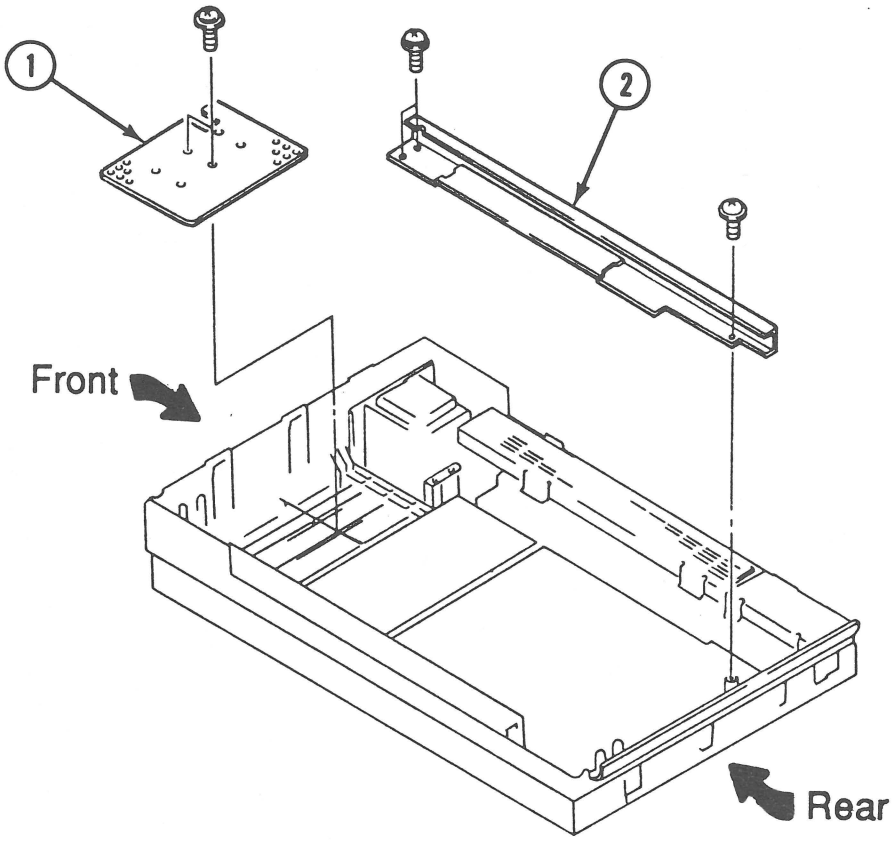


**FIGURE 25**

10. Replace the optical block.

11. Replace the top cover and lid.

## ❑ TRANSFORMER

**Remove**

To remove the power transformer:

1. Remove the lid and top cover.
2. Remove the carriage assembly.
3. Remove the pulley and carrier motor assembly.
4. Remove the left-side guide rail (Figure 26, #1) next by removing the three screws. When the rail is removed, the inside housing cover will come with it (Figure 26, #2).
5. Unscrew the one screw from the black shield plate (Figure 26, #3), and remove the plate by sliding it to the right side and then up.

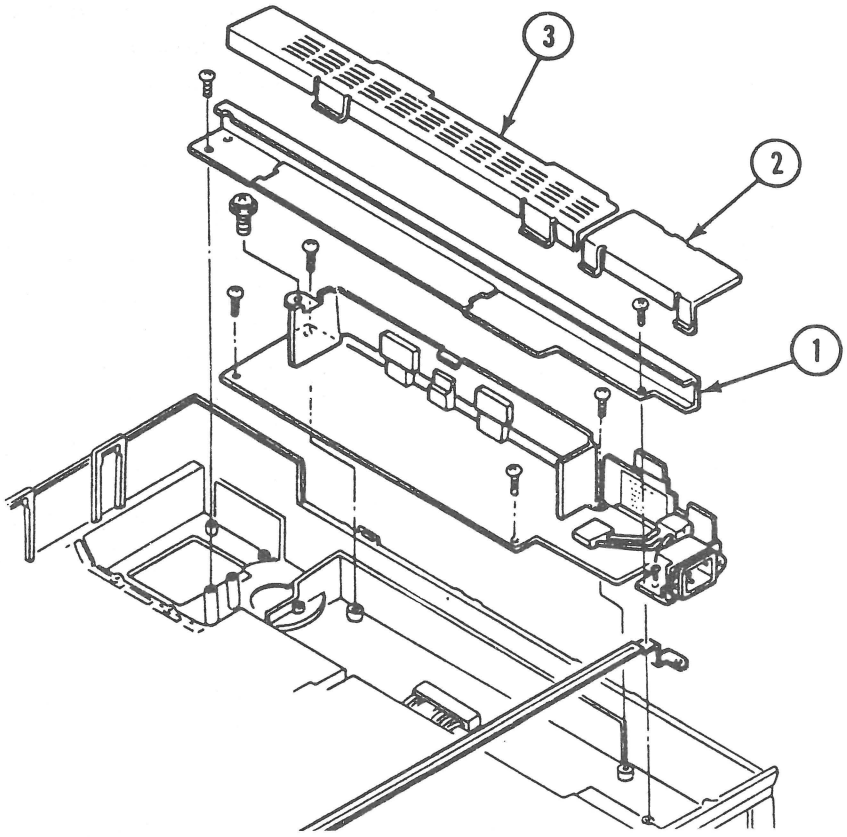


**FIGURE 26**

6. Remove connectors CN2 and CN5 from the power supply board.

7. Remove the two screws that hold the ground bracket (Figure 27, #1) that connects the transformer base plate and the power supply.

8. Remove the four screws (Figure 27, #2) from the mounting plate that holds the transformer to the bottom case.

9. Pull out the transformer assembly along with the long wire that runs along the right side of the bottom case. Undo the wires from the wire harness clips as needed.

10. Remove the interlock switch assembly at the right rear of the scanner. If you are replacing the transformer, this switch assembly is part of the transformer assembly.

11. To remove the transformer from the base plate, unscrew the two mounting screws (Figure 27, #3) that hold the transformer to the mounting plate, and remove the transformer.

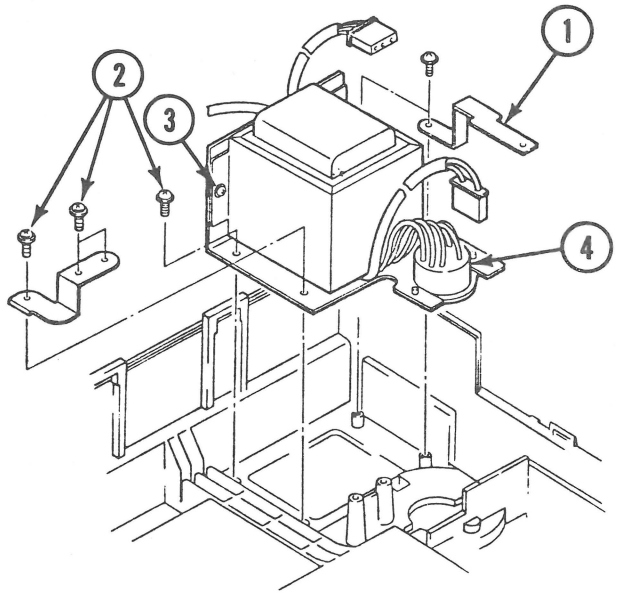


**FIGURE 27**

*Universal Models*

On universal transformers you must also remove the power selector switch (Figure 27, #4) by removing the two Phillips screws that hold it to the plate.

**Replace**

1. Secure the transformer to the mounting plate using the two screws (Figure 27, #3).

   ***Note:*** On universal transformers, secure the power selector switch (Figure 27, #4) with the two Phillips screws.

2. Using four screws (Figure 27, #2), secure the transformer plate assembly to the bottom case.

3. Using the two screws, secure the ground bracket (Figure 27, #1) that connects the mounting plate to the power supply board.

4. Locate the long set of wires that are attached to the interlock switch, and run the wires across the front section of the bottom case and along the right side. The wires should be tucked into the wire harness clips along the case.

   ***Note:*** If the interlock switch (Figure 28, #1) was removed from the bracket (Figure 28, #2), attach the switch to the bottom side of the bracket using one screw (Figure 28, #3). The switch button should be facing out toward the side of the case.

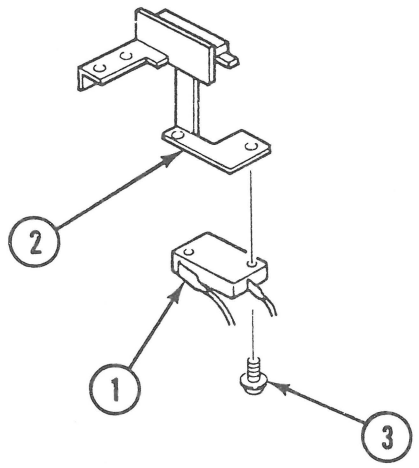


**FIGURE 28**

5. The black-and-white shielded wire should be run along the left side of the case so that it will reach connector CN2 on the power supply board.

6. Replace the left rail and power supply shield.

## ❑ POWER SUPPLY PCB

**Remove**

To remove the power supply PCB:

1. Remove the lid and top cover.

2. Remove the carrier assembly.

3. Remove the left-side guide rail (Figure 29, #1) by removing the three screws. When the rail is removed, the black plastic inside housing cover will come with it (see Figure 29, #2).

4. Unscrew the one screw from the black shield plate (Figure 29, #3), and remove the plate by sliding it to the right side and then up.

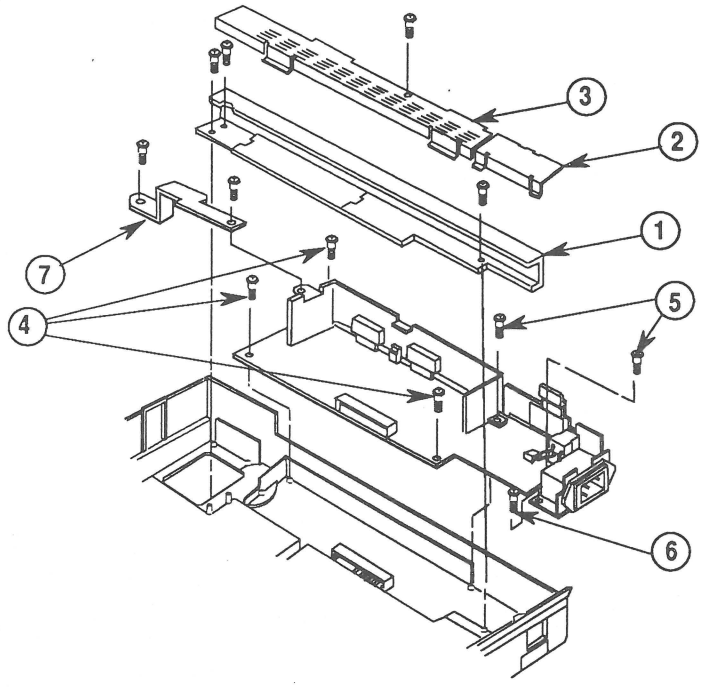


**FIGURE 29**

5. Disconnect the five connectors—CN1, CN2, CN3, CN4, and CN5—from the power supply board.

6. Remove the three self-tapping screws (Figure 29, #4) and the two machine screws (Figure 29, #5) that hold the power supply board to the housing. Remove the ground wire screw (Figure 29, #6).

7. Remove the ground strap bracket (Figure 29, #7) and remove the board.

**Replace**

1. Before putting in the power supply board completely, line up connector CN3 (Figure 30, #1) on the power supply board with the connector (Figure 30, #2) coming from the main logic PCB, and connect them together.

2. Place the power supply board in the case and secure it with the three self-tapping screws (Figure 30, #3) and the one ground screw (Figure 30, #4).

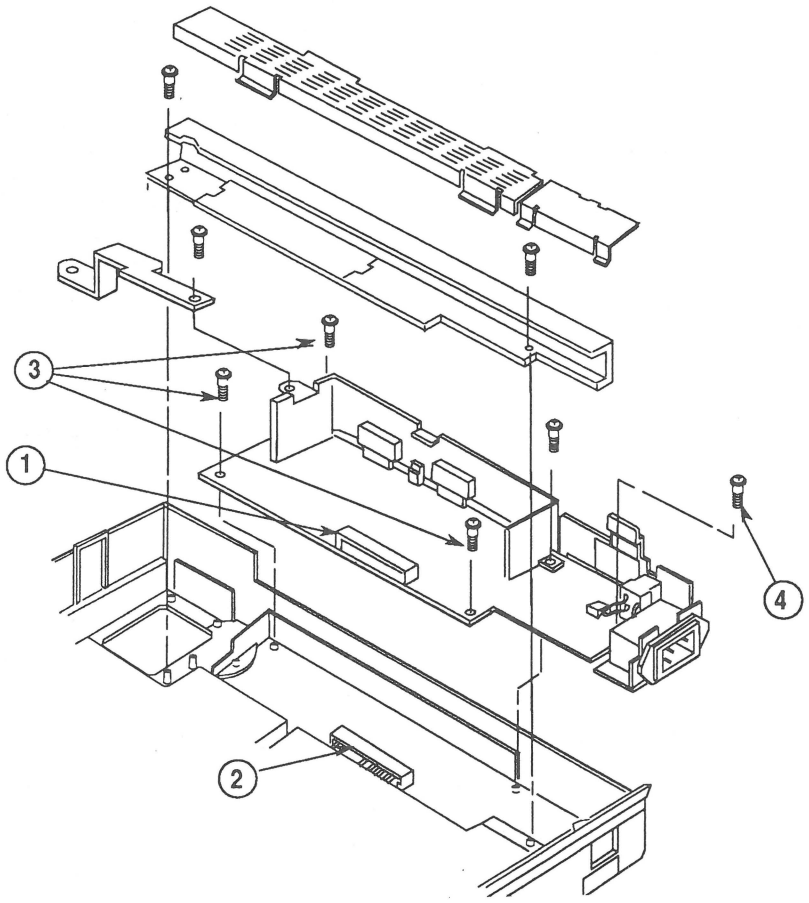


**FIGURE 30**

3. Connect the remaining four connectors—CN1, CN2, CN4, and CN5—to the power supply board.

4. Connect the ground strap bracket (Figure 31, #1) from the transformer plate to the power supply board.

***Note:*** If the transformer is out of the unit, do not replace the black shield or the left rail at this time.

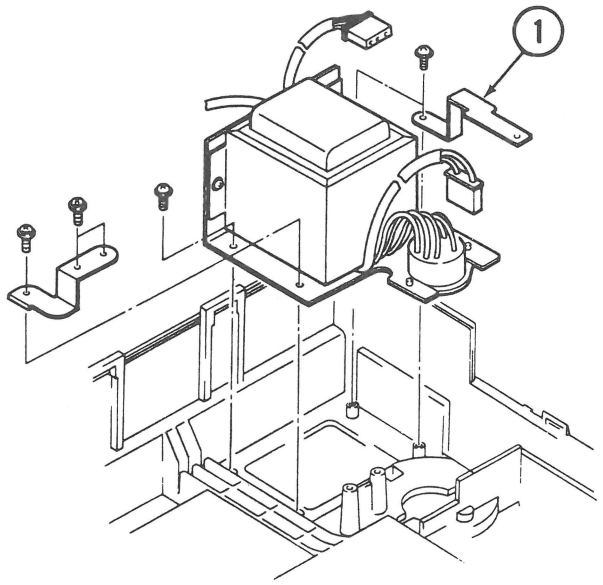


**FIGURE 31**

5. Replace the left-side guide rail (Figure 32, #1) with three screws.

6. Replace the black shield plate (Figure 32, #3) and secure it with one screw.

7. Attach the inside housing (Figure 32, #2). Make sure that the tabs snap into the slots on the left guide rail.

8. Secure the ground strap (Figure 32, #4) with its screw.

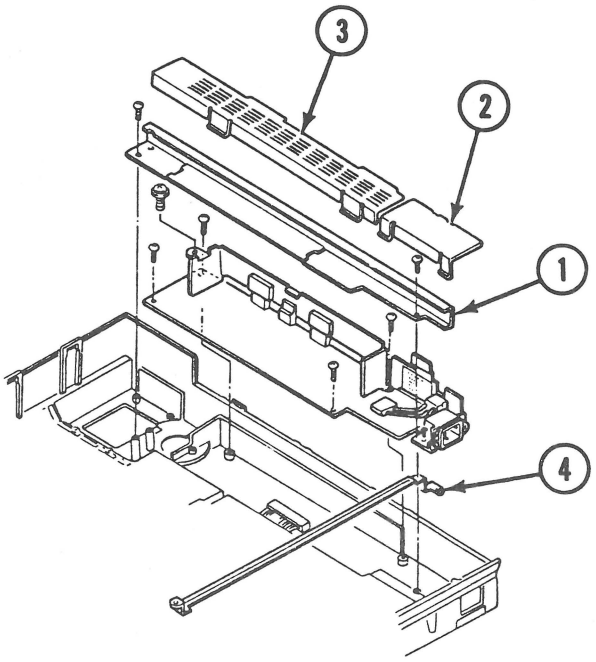


**FIGURE 32**

9. Replace the carriage assembly.

10. Replace the top cover and lid.

## ❑ AC SWITCH PLATE AND PLUG ASSEMBLY

**Remove**

To remove the switch plate assembly:

1. Remove the lid and top cover.
2. Remove the power supply board.
3. Remove the one screw that holds the switch to the case (Figure 33, #1), and remove the switch plate and plug assembly.

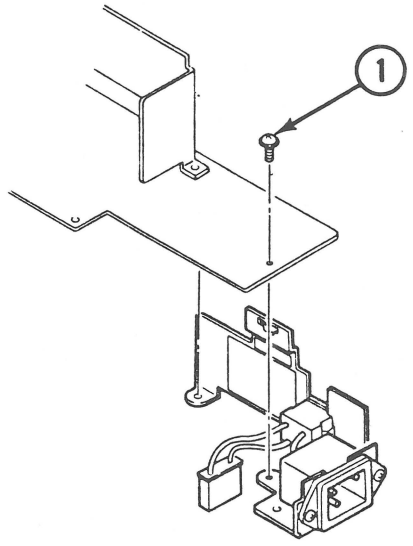


**FIGURE 33**

**Replace**

1. Replace the switch plate assembly on the case and secure it with the one screw (Figure 33, # 1) plus the ground wire screw from the power supply board.
2. Replace the power supply board.
3. Replace the top cover and lid.

## ❑ MAIN LOGIC PCB

**Remove**

To remove the main logic PCB:

1. Stand the scanner on its left side (Figure 34).

2. Loosen the three screws on the bottom panel (Figure 34, #1). (The screws will not come out, but make sure they are loosened all the way.) The panel will come off.

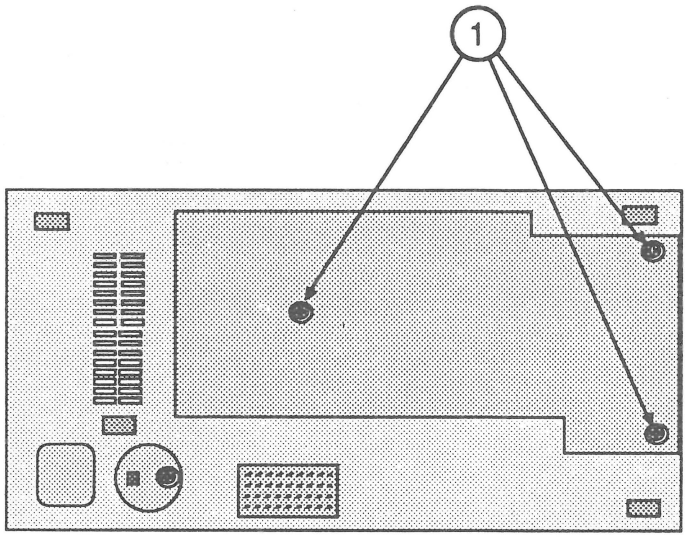


FIGURE 34

3. Remove the four screws (Figure 35, #1) that hold the PCB to the case.

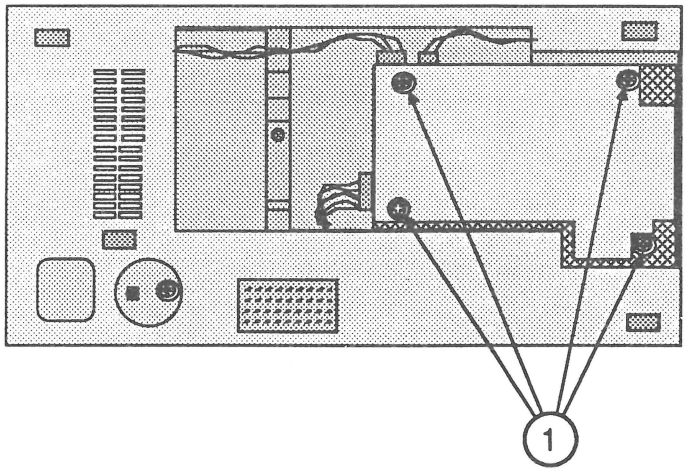


FIGURE 35

4. Once the screws are removed, the board will be loose and you can pull it out easily. Before pulling the board all the way out, reach around and remove the four connectors—CN2, CN3, CN7, and CN8—(Figure 36, #1).

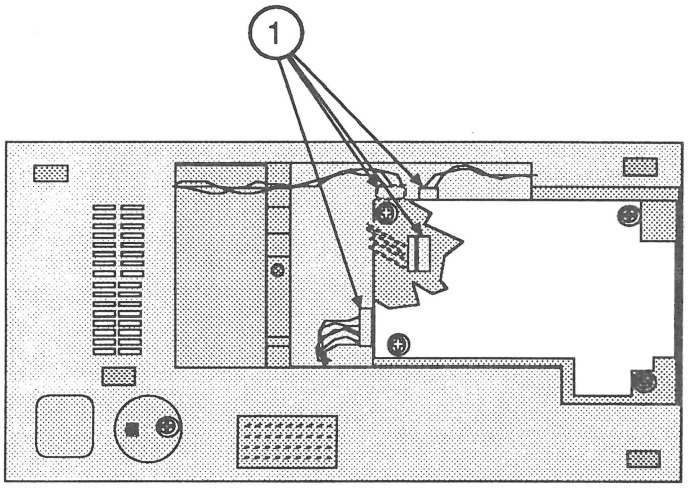


**FIGURE 36**

**Replace**

1. Attach the four cables to connectors CN2, CN3, CN7, and CN8 (Figure 37, #1).

2. Line up the four screw holes on the corners of the board with the four holes on the case.

3. Screw in the four screws (Figure 37, #2).

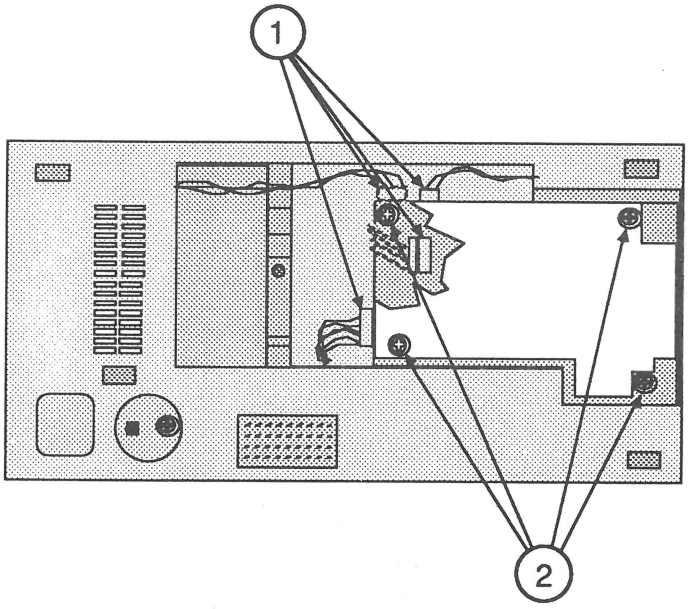


**FIGURE 37**

4. Use the three screws to install the bottom panel (Figure 38 #1).

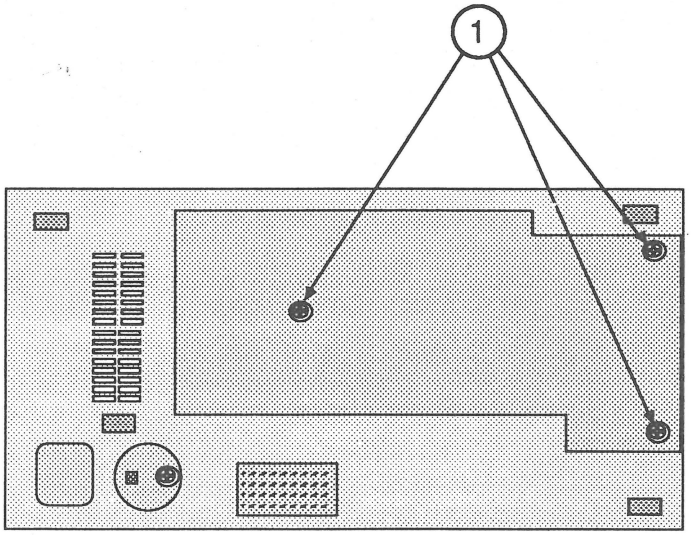


**FIGURE 38**

Apple Technical Procedures

# Apple Scanner

## Section 3 – Diagnostics

## ❑ CONTENTS


3.2 Introduction
3.4 Test Descriptions
3.4 Accuracy Test
3.4 Image Halftone Test
3.5 Image Grayscale Test
3.5 Image Resolution Test
3.6 Using ScanTest
3.6 Materials Required
3.7 Procedure
3.10 Immediate Mode
3.10 Startup Screen
3.11 Configuration

## ❑ INTRODUCTION

ScanTest™ 4.4 is a diagnostic program that verifies whether the Apple Scanner is working correctly. ScanTest provides a built-in self test and three user-selectable tests:

- Accuracy Test
- Image Greyscale Test
- Image Resolution Test

The built-in self-test executes prior to the start of the user-selectable tests. The built-in self-test includes the following:

- ROM diagnostic (tests ROM)
- RAM diagnostic (tests RAM)
- Lamp tests (checks for no-light or dim-light condition)
- Home position test (detects optical block in home position)
- Shade error test (tests for detectable shading errors)
- CPU port, DIPP, DMA, and GA1 component tests

To run ScanTest, you must use the *Apple Scanner Service Test Chart.* The chart is shown in Figure 1.

Before using the test chart, examine the chart for the following conditions, any of which could cause a test to fail:

- There should be no folds, bends, or scratches anywhere on the chart.

- The chart should be completely clean—no smudges, spots, or stains.

If it becomes necessary to clean the test chart, use only a clean and dry lint-free cloth. **Do not** use any solvents or cleansers as these could ruin the test chart.

When the test chart is not in use, it should not be exposed to sunlight or any source of ultraviolet light. To protect the chart from dirt and other possible damage, store it in its supplied protective folder and envelope or other flat container.

***Note:*** ScanTest may be run from the diagnostic disk or may be copied to your hard disk and launched from there. If you are running ScanTest from a hard disk, make sure that you use Macintosh system software 6.0.5 or later.

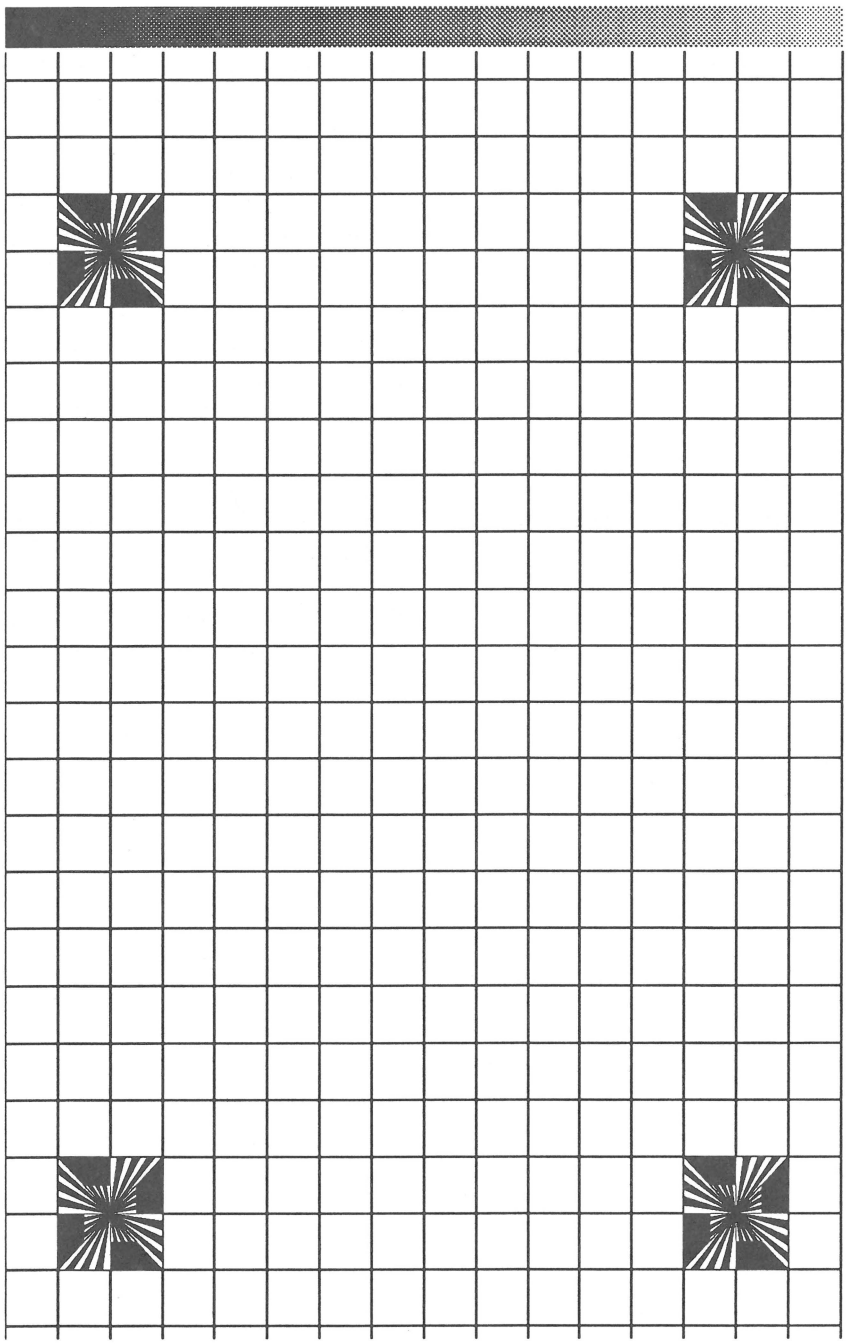

**FIGURE 1**

## ❑ TEST DESCRIPTIONS

The following is a brief description of the three tests that are available in ScanTest. If a failure occurs during any test, a message window appears on the monitor screen.

### Accuracy Test

In the accuracy test, the scanner scans the test chart for reference points and creates a table based on these points. The test then compares the actual intersection points against this table. If the intersection points deviate from the table specifications, the test fails. Next, the scanner scans the test chart again and compares the first set of data with the data from the second scan. The data from both scans should be identical, meaning that the location of intersections from one scan should be the same as those from the second scan. If not, the test fails.

### Image Grayscale Test

The image Grayscale test uses the gray-scale strip at the bottom of the test chart. The strip has 36 zones of gray. Each zone has a value. When the scanner scans the strip, the test compares the values to preset values. A deviation of ±1 gray scale fails the test.

### Image Resolution Test

The resolution test uses the upper-left and lower-right targets on the test chart. The test is the same for each target. The test detects the top, bottom, left, and right edges of the wedge. It then counts the pixels from the center of the target to the edge. The software calculates a pixel average and applies a formula to calculate the resolution. If the resolution is not within specifications, the test fails.

## ❑ USING SCANTEST

**Materials Required**

ScanTest 4.4 diagnostic program
Apple Scanner Service Test Chart

***IMPORTANT:*** *Before you run ScanTest, you must check for the following conditions:*

- *The scanner must be attached correctly to the computer through the SCSI connector. The power cord must be plugged in and the power switch turned on.*
- *The glass must be completely clean, outside and inside.*
- *There must be no debris between the glass and the test chart.*
- *The test chart must be placed face down on the scanner window, with the black strip along the rear edge of the window and the edge of the chart against the right edge of the glass (see Figure 2).*
- *The scanner SCSI address must not be set to 7 or to the address of any other device connected to the SCSI bus.*
- *The SCSI bus must be properly terminated. If you need assistance, refer to the Apple SCSI Cable System manual.*

*Failure to meet these conditions will cause the diagnostic tests to fail and may give you false information about the scanner.*

**Procedure**

1. Place the test chart on the Apple Scanner as shown in Figure 2.

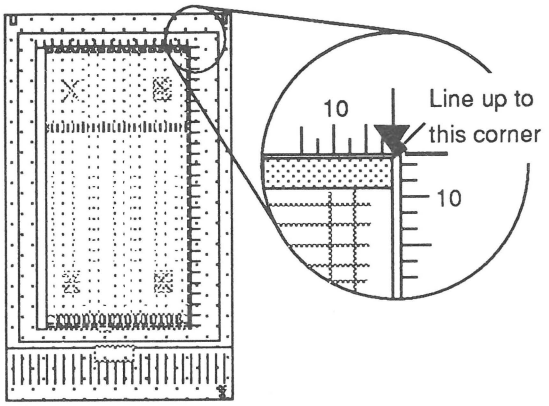


**FIGURE 2**

2. **Carefully** close the top lid, without moving the test chart.

3. Start ScanTest by double-clicking on the ScanTest application icon (from the hard disk or from the floppy disk). If the startup screen is not disabled, the screen shown in Figure 3 will display. (Refer to "Startup Screen" later in this section.) This information window reminds you of certain conditions that must be present before ScanTest can run correctly.

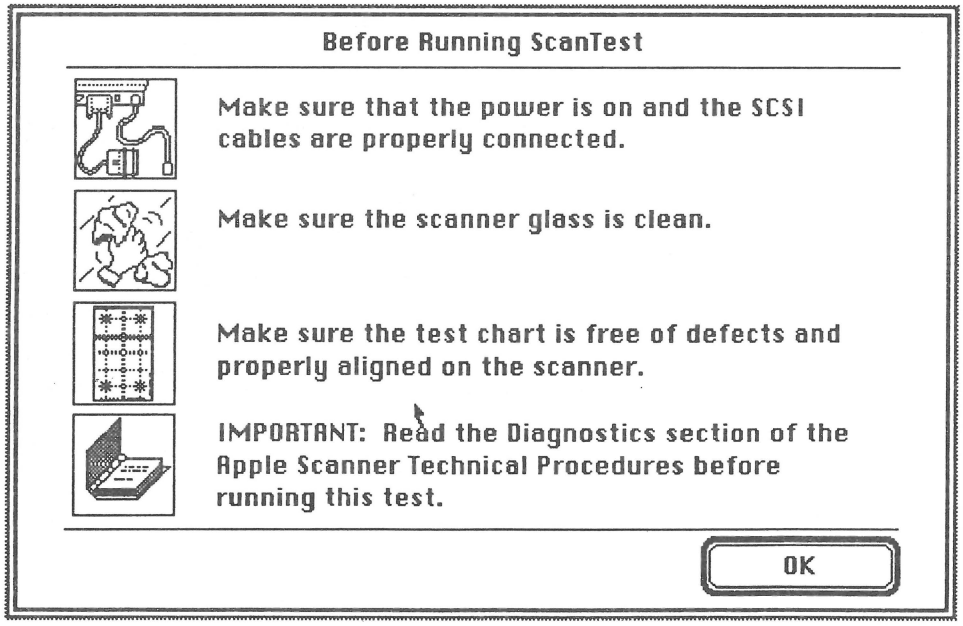


**FIGURE 3**

4. When you have read the screen and made sure these conditions are correct, click **OK**. The status screen will display (Figure 4).

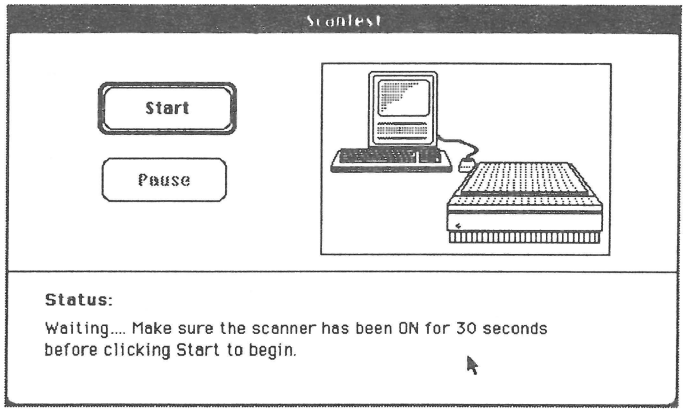


**FIGURE 4**

5. Pull down the Options menu and select **Test Selections** (see Figure 5), or hold down the <Command> key while typing T.

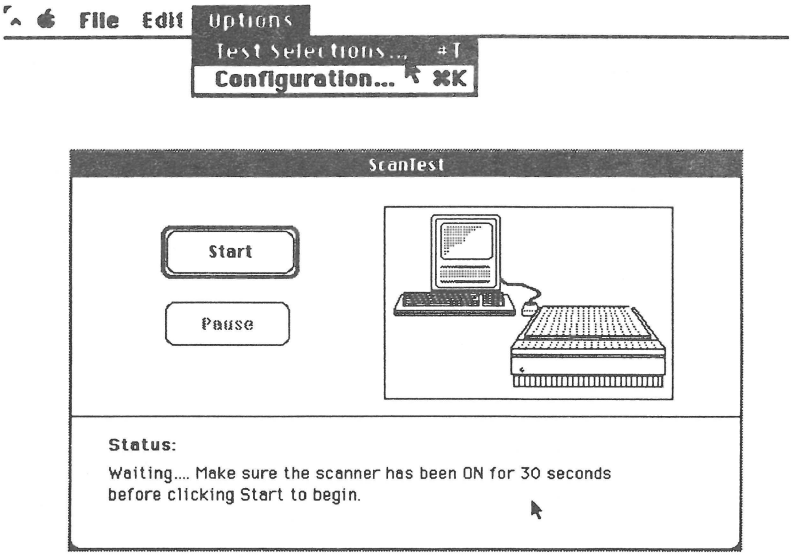


**FIGURE 5**

6. The test selection window (Figure 6) will appear. You can select any of the three tests—one at a time or in any combination.

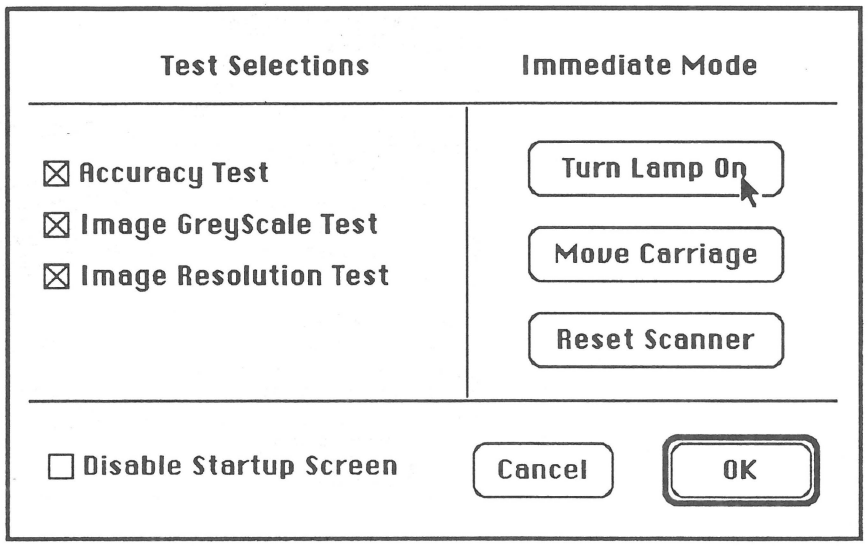


FIGURE 6

7. Select the tests you want to run by clicking in the box next to the test. When you have selected all the tests you want, click **OK.**

   ***Note:*** Once you have selected the tests you want to run, you can set these tests to run whenever you start ScanTest. To set tests, select **Save Test Selections** from the Edit menu. You will still have the option to change your selection whenever you want by redoing steps 5, 6, and 7.

8. Click the Start button.

9. The diagnostic runs the tests you have selected. If any test fails, the test stops and gives you an information window (as in Figure 7).

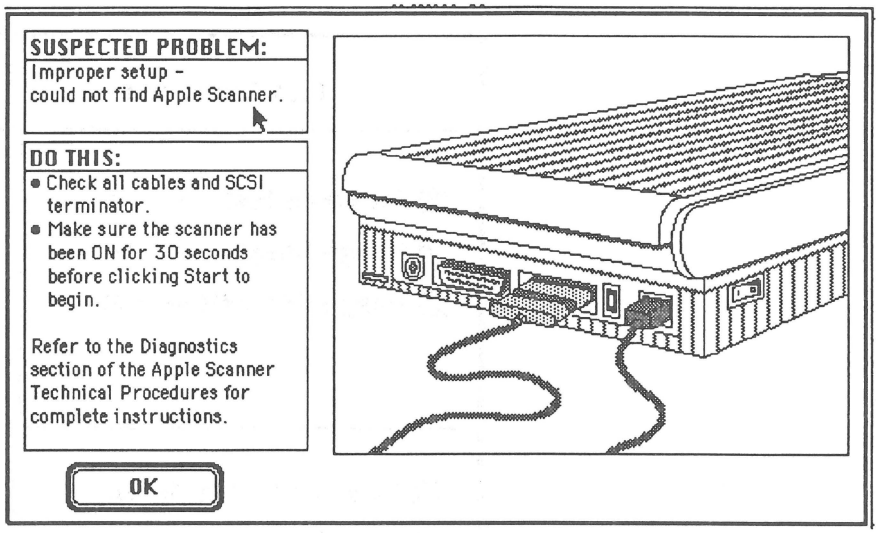


**FIGURE 7**

**Immediate Mode**

ScanTest provides an **immediate mode** to reset the scanner, control the movement of the carriage, and turn the lamp on and off. Functions are selected by clicking on the appropriate button at the right side of the test selections window.

**Startup Screen**

The startup screen displays setup information important to obtaining good results with ScanTest. If you do not want the startup screen displayed each time ScanTest is run, select **Disable Startup Screen.**

**Configuration**

The Configuration selection displays a variety of information that can aid in troubleshooting:

- **Vendor ID** – Identifies Apple as the manufacturer
- **Product ID** – Displays the scanner model number
- **Revision** – Displays the version of firmware installed
- **SCSI Port** – Displays the SCSI device address for the scanner

*Additional Information*

Additional self-test information can be displayed by clicking on the Additional Info button at the bottom of the Configuration window. This information provides additional detail as to the nature of a failure.

Apple Technical Procedures

# Apple Scanner

## Section 4 – Troubleshooting

### ❑ CONTENTS


4.2 Running Self-Test
4.2 Self-Test Results
4.3 Symptom/Cure Chart

## ❑ RUNNING SELF-TEST

The Apple Scanner has built-in self-test diagnostics that test various functions of the scanner. Functions being tested are:

- Fluorescent lamp intensity check
- Limit switch searching
- Home position searching
- Shading check
- ROM check
- RAM check
- CPU port check
- Digital image preprocessor check
- DMA controller check
- Gate array 1 check
- Gate array 2 check
- SCSI controller check

The self-test can be activated by two different methods; the first is by turning on the scanner and holding the start scan button down (hardware method). The second way of running the self-test is by running the ScanTest diagnostic. This second method is covered in the diagnostic section.

### Self-Test Results

In order to see the results of the self-test, you must either have the AppleScan application running when you start the self-test, or you must have ScanTest running.

In either case, as long as the application is up and running on the Macintosh and the computer is connected to the scanner, if one of the self-test functions fails, a dialog box will be displayed on the Macintosh screen, giving you some indication of what part of the self-test failed.

If you run self-test and are not connected to a Macintosh or are not running one of the programs mention above, you will not get results for the test.

## ❑ SYMPTOM / CURE CHART

| Problems | Solutions |
|---|---|
| • *Power lamp not on; machine dead* | 1. Check that the power cord is plugged in.<br>2. Check that the lamp cover is closed and turned fully clockwise.<br>3. Check for correct setting of the voltage selector (on universal models).<br>4. Check the interlock switch with a multimeter and replace if the switch is not opening and closing when depressed.<br>5. Check fuses FU1, FU2, and FU3 on the power supply board and replace any that are blown.<br>6. Check fuse 1 on the main PCB.<br>7. Replace the main PCB.<br>8. Replace the power supply.<br>9. Replace the transformer. |
| • *Optical assembly does not move* | 1. Check for damage or foreign matter on the belt, and clean or replace the belt if necessary.<br>2. Check the belt tension. The belt should be tight with no slack in it. Correct the tension if necessary.<br>3. Check for damage to the gears or buildup of foreign material on them, and remove the blockage or replace the gears as necessary. |
| • *Optical assembly moves once, then does not move* | – Check the limit switch for continuity, and replace if necessary. |
| • *System does not boot or locks up during transfer of data over the SCSI bus* | – Perform the "Main Logic Board Modification" described in Section 5, Additional Procedures. |
| • *AppleScan program crashes during middle of scanning operation, or computer hangs* | 1. Make sure latest version of the AppleScan program is used.<br>2. Replace the power supply PCB.<br>3. Replace the main logic PCB. |

- *Fluorescent lamp won't light or is dim*

1. Check the lamp holder connector for secure connection.
2. Check that the label of the fluorescent lamp faces down (into the lamp holder); if not, rotate the lamp.
3. Replace the lamp.
4. Check the flexible cable from the optical unit for damage, and replace the cable if necessary. Check the continuity of the cable with an ohmmeter; replace the cable if any traces are open.
5. Replace the inverter (or optical head).

- *Scan command not executed*

1. Check for secure connection of cable from host computer.
2. Reset the SCSI select switch on the scanner to a device number not used. (Factory preset at 2.) Do not use 7 or 8.
3. Check to make sure that the SCSI cable is terminated correctly.
4. Check the fuse on the main logic PCB. Replace the fuse if it is bad.
5. Replace the main logic PCB.

- *Image not clean; dark or light spots*

1. Clean the glass (see "Preventive Maintenance" in the Basics section).
2. If the contrast or threshold in the AppleScan program is set too high or low, adjust the program settings.
3. Replace the lamp.
4. Replace the main logic board.
5. Replace the optical assembly.

- *Scanning performed, but image is not sent to host computer*

1. Check for loose or damaged interface connector, and repair or replace as necessary.
2. Replace the optical assembly.
3. Check the fuse on the main logic PCB. Replace the fuse if it is blown.
4. Replace the main logic PCB.

- *Incorrect image on host screen*

– Use the test chart. If image is incorrect, clean the glass first; if cleaning does not help, then change the optical assembly.

Apple Technical Procedures

# Apple Scanner

## Section 5 – Additional Procedures

## ❑ CONTENTS


5.2 Power Supply Fuses
5.4 Main Logic PCB Fuse—FU1 (SCSI Line Fuse)
5.5 Selecting Correct Voltage
5.6 Bulb Replacement
5.6 Remove the Bulb Assembly
5.8 Install the Fluorescent Bulb
5.9 Replace the Bulb Assembly
5.10 Voltage Conversion
5.10 Comparison
5.12 110 Volt to Universal
5.12 Universal to 110 Volt
5.12 Main Logic Board Modification

## ❑ POWER SUPPLY FUSES

**Remove**

To remove Fuse 1, 2, or 3, do the following:

1. Make sure power is turned off, and remove the power cord.

2. Remove the lid and top case.

3. Remove the left guide rail housing (Figure 1, #1) from the guide rail (Figure 1, #2) by pulling up on the center of the housing with your forefinger. This will expose fuses 2 and 3 on the power supply board.

4. Remove the black plastic housing (Figure 1, #3) by squeezing on the inside part of the housing and lifting it out from the rail guide. This exposes fuse number 1.

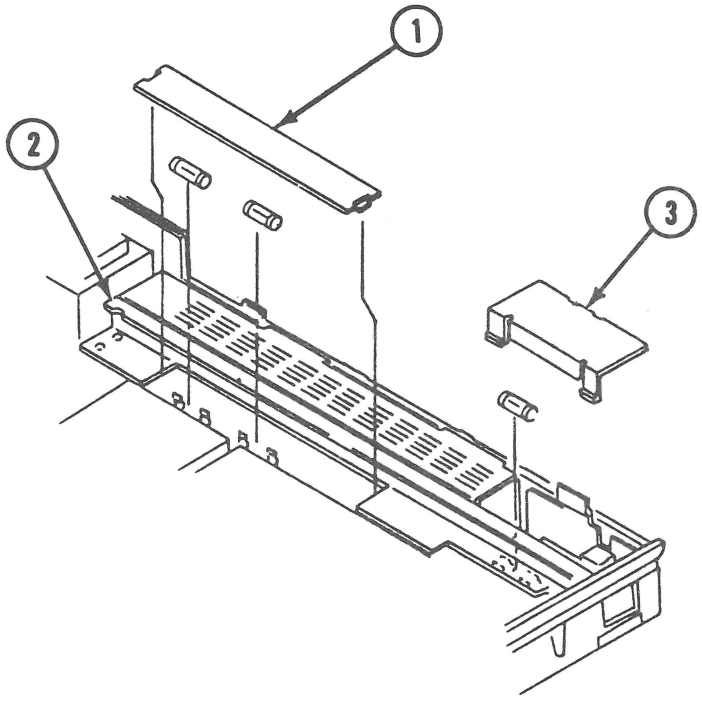


**FIGURE 1**

5. Remove Fuse 1 (Figure 2, #1) using a fuse removal tool, or carefully pry up one end using a small flat-blade screwdriver and pull the fuse out.

6. Remove the other two fuses—2 (Figure 2, #2) and 3 (Figure 2, #3)—the same way as in step 5.

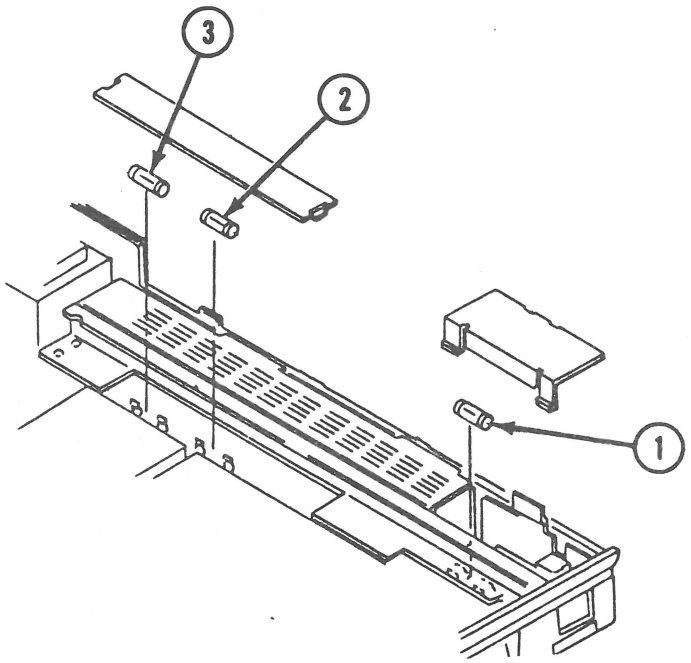


**FIGURE 2**

**Replace**

1. Replace any of the fuses by pressing the ends of the fuse into the holder.

2. Replace the plastic housing (Figure 1, #1) into the left rail guide by inserting one end and then slightly bowing the housing so that the tab on the other end fits into the rail.

3. Replace the black plastic housing (Figure 1, #3) by inserting the one tab into the bracket slot and then squeezing the other two tabs on the housing and slipping them into the slots on the guide rail.

## ❑ MAIN LOGIC PCB FUSE —FU1 (SCSI LINE FUSE)

**Replace**

To replace fuse FU1:

1. Remove the main PCB.

2. Locate fuse FU1 (Figure 3, #1). Remove the fuse with a fuse removal tool or carefully pry up one end of the fuse with a small screwdriver.

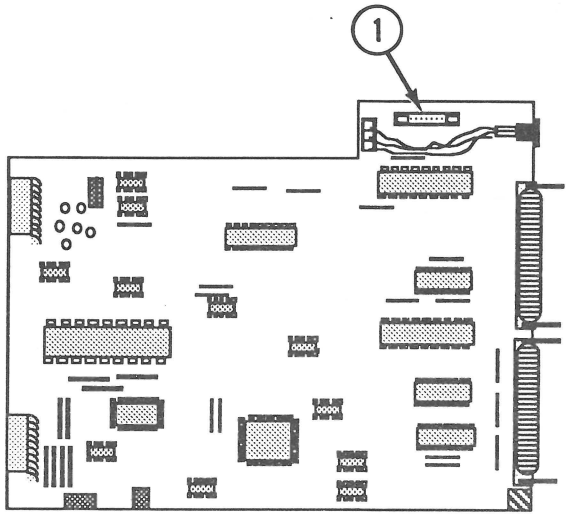


**FIGURE 3**

3. You can test the fuse with an ohmmeter as follows:

   a) Set meter to the times-1 scale, or to the continuity range if the meter has one.

   b) Put the leads across the fuse. If the meter reads short (zero on the scale, or the continuity beeper sounds), the fuse is good. If the meter reads open or the continuity beeper does not sound, then the fuse is bad.

4. Replace the fuse if defective (see specifications or owner's manual for correct fuse replacement).

## ❑ SELECTING CORRECT VOLTAGE

To change the incoming voltage selector (on units supplied with universal selector switch):

1. Locate the cover plate on the bottom of the scanner (Figure 4, #1).

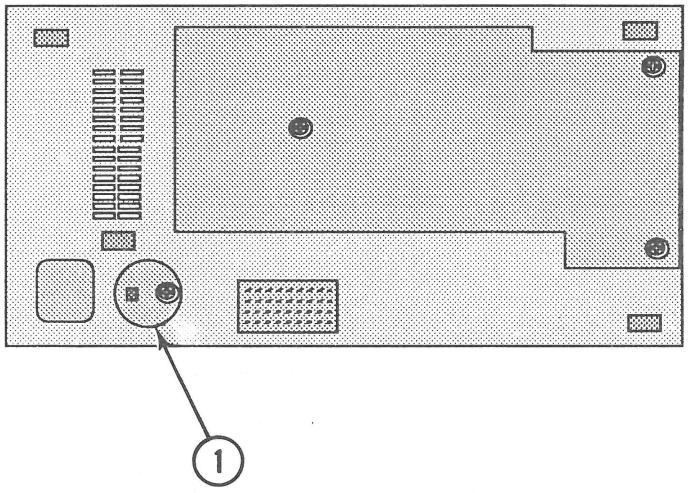


**FIGURE 4**

2. Remove the Phillips screw and remove the cover plate.

3. Using a large flat-blade screwdriver or a coin, turn the voltage selector to match the correct incoming voltage.

4. Using the screw, reinstall the cover plate.

## ❑ BULB REPLACEMENT

### Remove the Bulb Assembly

To remove the old bulb without taking off the top cover glass assembly:

1. Raise the top cover to the vertical position (Figure 5, #1).

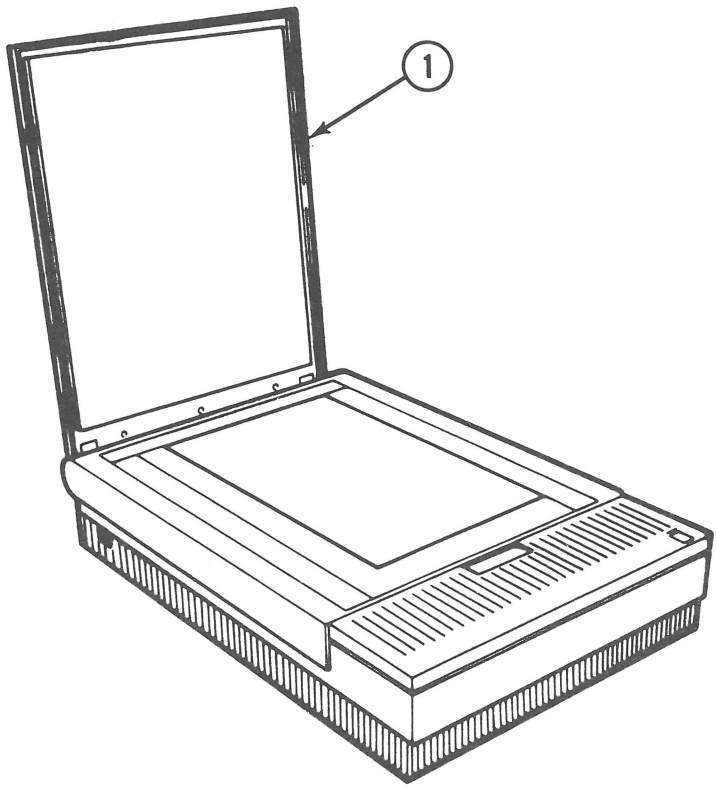


**FIGURE 5**

2. Make sure the optical block (under the glass) is in the home position (the position closest to the back of the scanner). You can do this by powering on the scanner; it will set itself to the home position.

   ***Note:*** The side door on the right side of the scanner must be closed and the latch must be locked completely (turned all the way to the right) in order for the scanner to power on and the optical block to reset to the home position. The latch activates an interlock switch. As soon as the latch is unscrewed (to the left), the interlock switch is deactivated and the scanner will not power on.

3. Using a large flat-blade screwdriver or a coin, unscrew (counterclockwise) the latch (Figure 6, #1) on the side door (Figure 6, #2) on the right side of the scanner.

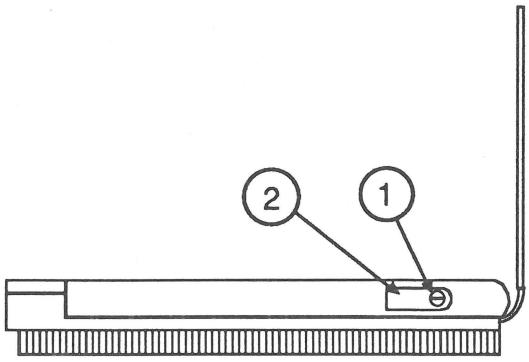


**FIGURE 6**

4. Once the side door is opened, use a Phillips screwdriver to loosen the screw (Figure 7, #1) that holds the light bulb assembly to the optical block. (The screw does not come out.)

5. Flip up the wire hook (Figure 7, #2) from the vertical position to the horizontal position.

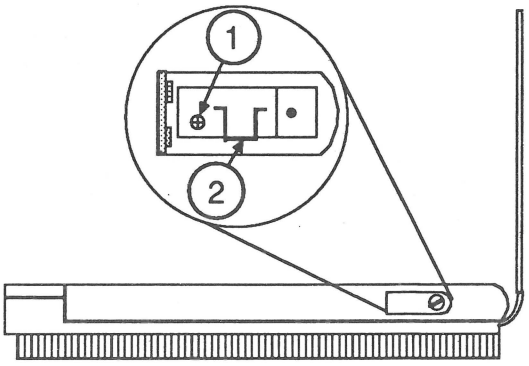


**FIGURE 7**

6. Grasp the wire hook with your forefinger and gently pull the bulb assembly out from the optical block. (If the bulb assembly offers resistance in coming out, then it is possible that the screw is not loose enough. Try loosening the screw farther and pulling on the hook at the same time.)

***WARNING:*** *When replacing the fluorescent bulb, do not pull or pry the bulb anywhere on the glass area. The glass can shatter and cause serious injury.*

### Install the Fluorescent Bulb

1. Use a small or medium-size flat-blade screwdriver to carefully pry, on the metal ends only, one side of the fluorescent bulb until the two pins disengage from the socket.

2. Once one side of the bulb is loose, you can disengage the other side using the same method.

3. To insert the new bulb, first position the bulb so that the printing on the bulb is facing down, or into the holder. Then line up the two pins on each end with the sockets on the bulb holder and press each end in, using firm but steady pressure. Do not press on the glass area of the bulb; the bulb can break and cause injury.

   ***Note:*** If the bulb has been handled (fingers on the glass), wipe the glass with a dry soft cloth before inserting in the assembly. Be sure not to touch the glass again, to avoid getting oil from your fingers on it.

## Replace the Bulb Assembly

After the bulb has been replaced in the bulb assembly, replace the assembly into the optical block.

1. Insert the far end of the bulb assembly through the side door, making sure that the bottom frame of the bulb assembly fits into the groove slots (Figure 8, #1) on the optical block.

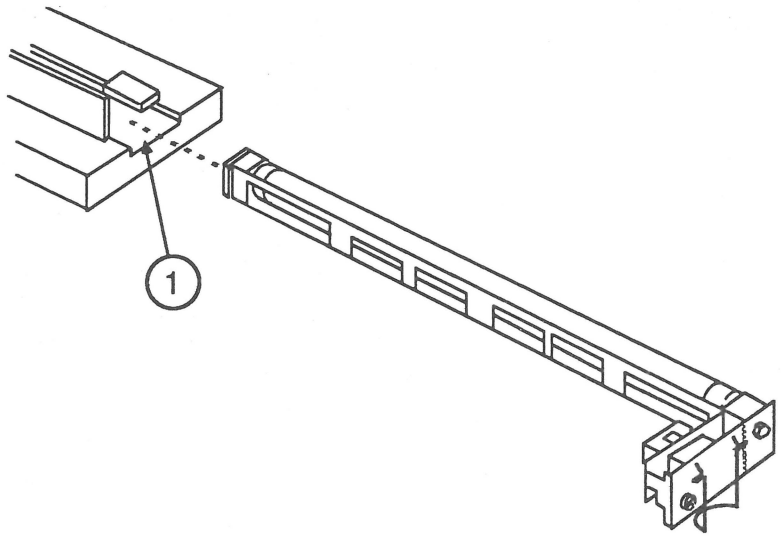


**FIGURE 8**

2. Push the assembly all the way in until the electrical connector makes contact with the socket on the optical block and the screw is lined up with the screw hole on the optical block.

3. Tighten the Phillips screw. (This also draws the two connectors together.) If the assembly does not seem to be drawing into the optical block and the screw doesn't seem to be getting tighter, you may have to pull the assembly partly out and push it in again to reseat it.

4. Close the side door and tighten the latch to the right, using the screwdriver or coin.

5. Turn the scanner on and make sure it activates to the home position. If it does not, then it is possible that the side door latch is not turned all the way to the right and the interlock switch is deactivated.

## ❑ VOLTAGE CONVERSION

To convert a 110V scanner (without the universal-voltage selector) to a universal voltage model, the transformer and bracket plate assembly must be removed and the universal model transformer and bracket plate assembly installed.

**Materials Needed**

Screwdriver
Phillips screwdriver
Universal transformer assembly (see illustrated parts)

**Comparison**

Figure 9 shows the 110V version of the transformer assembly. The assembly consists of the transformer (Figure 9, #1), the bracket plate (Figure 9, #2), the attached connectors (Figure 9, #3), the attached interlock switch (Figure 9, #4), and the two ground brackets (Figure 9, #5 and #6).

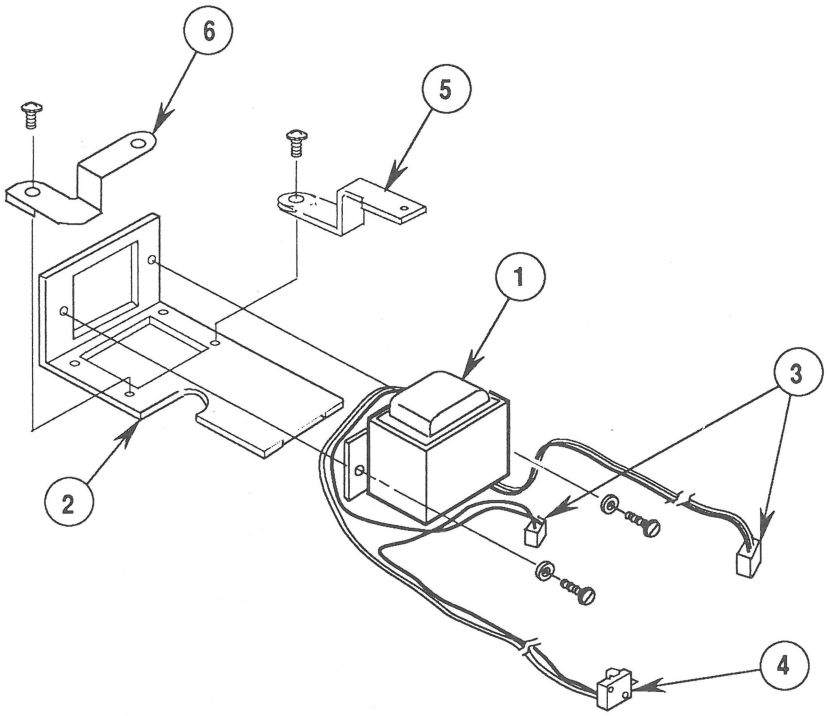


**FIGURE 9**

Figure 10 shows the universal (adjustable voltage) transformer assembly. The assembly consists of the transformer (Figure 10, #1), the bracket plate (Figure 10, #2; notice the cut-out for the voltage selector switch), the attached connectors (Figure 10, #3), the interlock switch (Figure 10, #4), the voltage selector switch (Figure 10, #5) and the two ground brackets (Figure 10, #6 and #7).

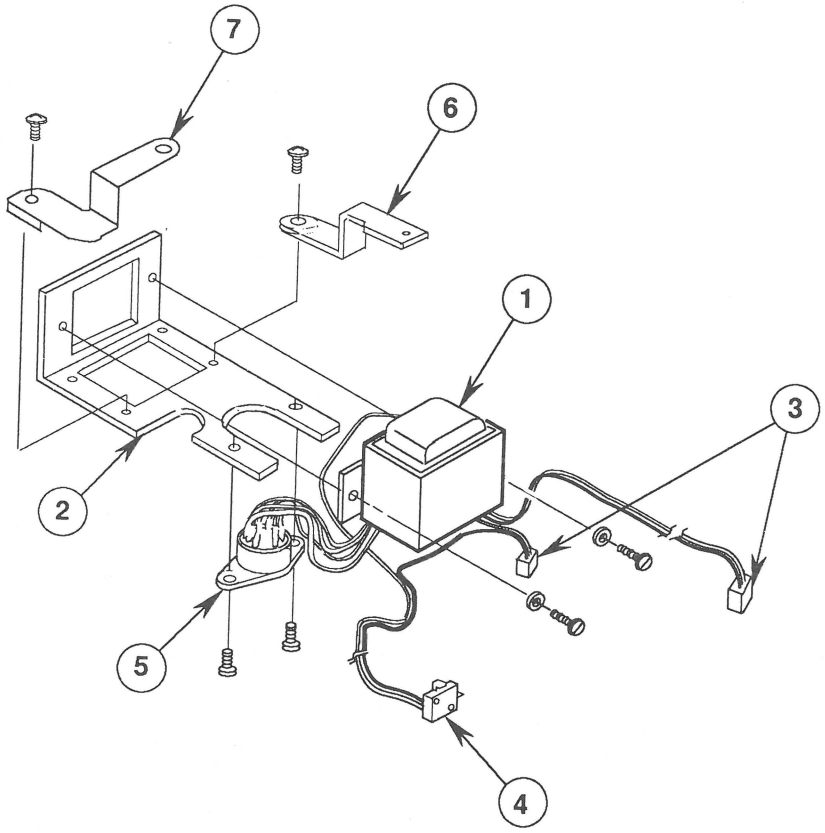


**FIGURE 10**

The main differences between the two assemblies are the transformers, the bracket plates, and the voltage selector switch on the universal version. After installing the universal assembly, you must set the voltage selector switch to the correct input voltage.

**110 Volt to Universal**

To convert from the 110V version to a universal-voltage model, do the following:

*Remove*

Follow the removal procedure in the Take-Apart section of this technical procedure.

*Install*

To install the universal model, follow the installation procedures in the Take-Apart section. Set the voltage selector switch to the correct input voltage.

**Universal to 110 Volt**

You do not need to change any hardware; just change the voltage selector switch to the correct input voltage.

## ❑ MAIN LOGIC BOARD MODIFICATION

When an Apple Scanner is connected to a Macintosh SE/30, Macintosh IIx, or Macintosh IIcx—in combination with other SCSI devices such as internal or external Hard Disks or the AppleCD SC—the following intermittent system problems may occur:

- The system will not boot.
- The system locks during transfer of data over the SCSI bus.

These system problems are the result of a Scanner SCSI bus timing error caused by three capacitors on the main logic PCB. Removing the capacitors from the board eliminates the timing problem and has no effect on the Scanner's performance. To remove the capacitors from the main logic PCB, perform the procedure described below.

**Materials Required**

Medium Phillips screwdriver
Small needlenose pliers
Small diagonal cutters

**Procedure**

1. Remove the main logic PCB.

2. Place the main logic PCB on a grounded workbench pad and put on your grounding wriststrap.

3. Locate the three capacitors at locations CA4, CA5, and CA6 (Figure 11, #1) on the main logic PCB, next to the SCSI connector at CN6 (Figure 11, #2).

***CAUTION:*** *When removing the capacitors, be careful not to touch other components on the main logic PCB.*

4. Using either your fingers or needlenose pliers, remove the three capacitors from the main logic PCB. Grasp each capacitor gently and bend back and forth until the connector pins are loose. Break or pull the capacitor off the board.

***CAUTION:*** *Be careful not to break the capacitor by grasping it too tightly.*

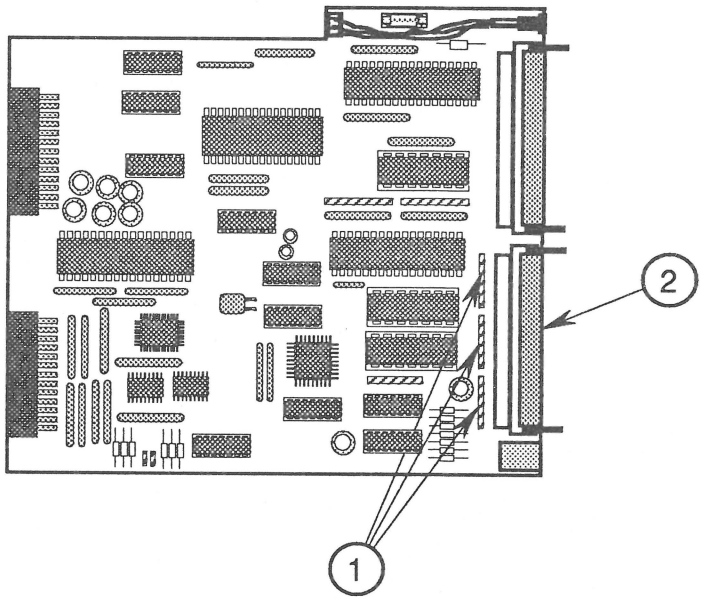


**FIGURE 11**

5. Using the small diagonal cutters, trim off any remaining capacitor pins.

6. Inspect and remove any debris from the board.

7. Replace the main logic PCB.

Apple Technical Procedures

# Apple Scanner

## Illustrated Parts List

## ❑ CONTENTS


IPL.3 Miscellaneous Hardware Kit
IPL.5 Parts Location (Figure 1)
IPL.7 Cover Assembly (Figure 2)
IPL.9 Carrier Assembly (Figure 3)
IPL.11 Optical Assembly (Figure 4)
IPL.13 Power Supply and PCB (Main, PS) Assemblies (Figure 5)
IPL.15 Cables (Figure 6)


The figures and lists in this section include all piece parts that can be purchased separately from Apple for the Apple Scanner, along with their part numbers. These are the only parts available from Apple. Refer to your *Apple Service Programs Manual* for prices.

## ❑ MISCELLANEOUS HARDWARE KIT

| Part No. | Description |
|---|---|
| 076-0289 | Miscellaneous Hardware Kit |

Certain piece parts shown on the following pages are available in this Miscellaneous Hardware Kit. The parts included are listed below.

| Part No. | Description | See Figure # |
|---|---|---|
| 076-0277 | Screw, Pan Head, 3 x 15 (10/pk) | Figure 2 |
| 076-0286 | Screw 2, Cover (10/pk) | Figure 2 and 5 |
| 076-0273 | Rubber Foot (10/pk) | Figure 2 |
| 076-0301 | Screw, Tapping 3 x 8 (10/pk) | Figure 2 and 5 |
| 076-0298 | Ribbon Cable Holder (5/pk) | Figure 2 |
| 076-0272 | Button Lamp Lock (5/pk) | Figure 2 |
| 076-0312 | Belt Tension Spring (10/pk) | Figure 3 |
| 076-0292 | Screw, Double Sems 3 x 10 (20/pk) | Figure 4 |
| 076-0313 | Carrier Stopper (10/pk) | Figure 4 |
| 076-0283 | Fuse, 2A, 250V-2.0A (10/pk) | Figure 5 |
| 076-0293 | Screw, Double Sems 3 x 6 (10/pk) | Figure 5 |
| 076-0284 | Fuse, 1A, 250V-1.0A (10/pk) | Figure 5 |
| 076-0285 | Fuse, 3A, 250V-3.0A (10/pk) | Figure 5 |
| 076-0294 | Screw, Sems 4 x 6 (10/pk) | Figure 5 |
| 076-0325 | Screw, Double Sems 4 x 8 (10/pk) | Figure 5 |

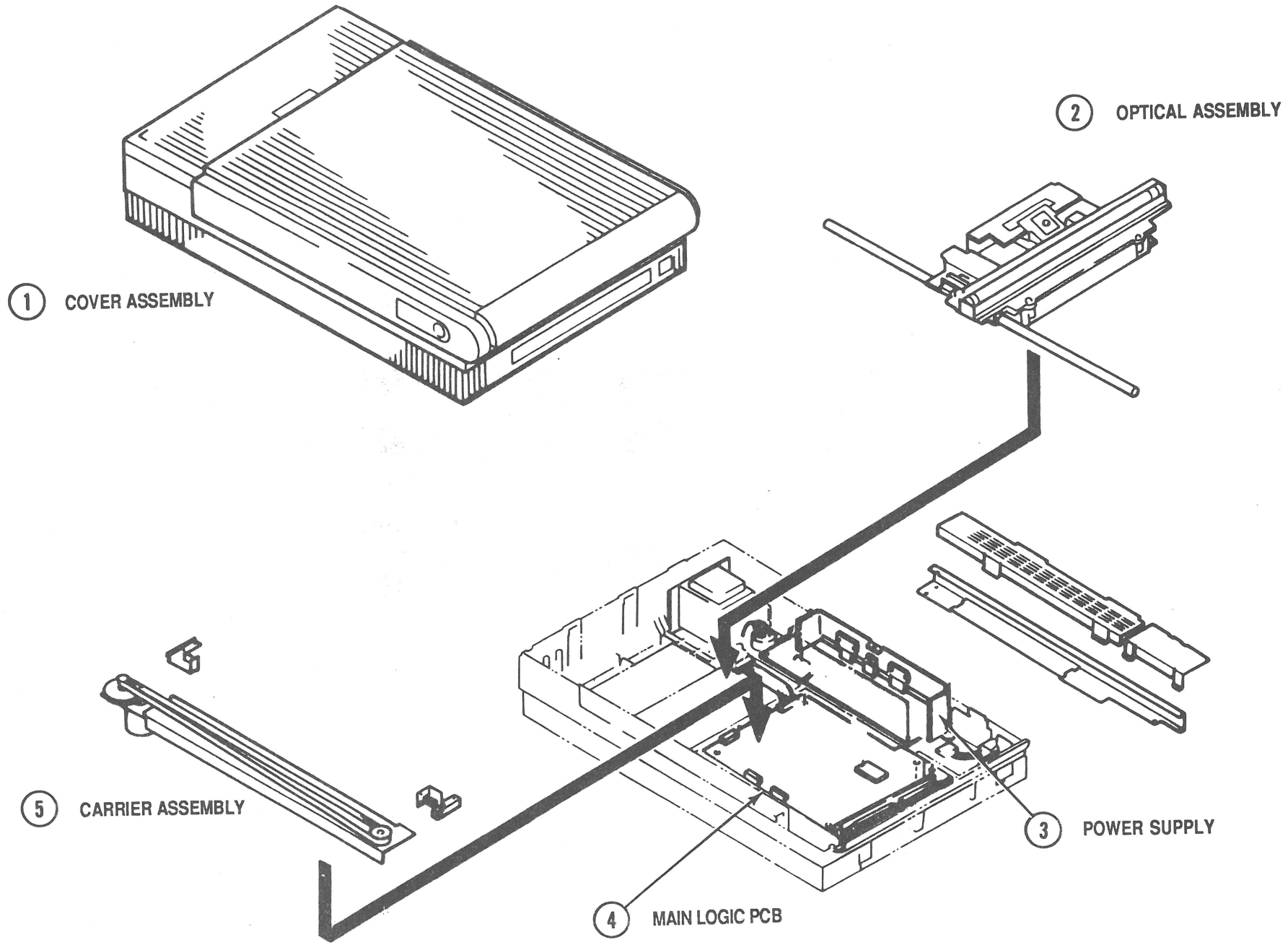
1 COVER ASSEMBLY
2 OPTICAL ASSEMBLY
3 POWER SUPPLY
4 MAIN LOGIC PCB
5 CARRIER ASSEMBLY

FIGURE 1

## ❑ PARTS LOCATION (Figure 1)

| Item | Description | See Figure # |
|---|---|---|
| 1 | Cover Assembly | Figure 2 |
| 2 | Optical Assembly | Figure 4 |
| 3 | Power Supply | Figure 5 |
| 4 | Main Logic PCB | Figure 5 |
| 5 | Carrier Assembly | Figure 3 |

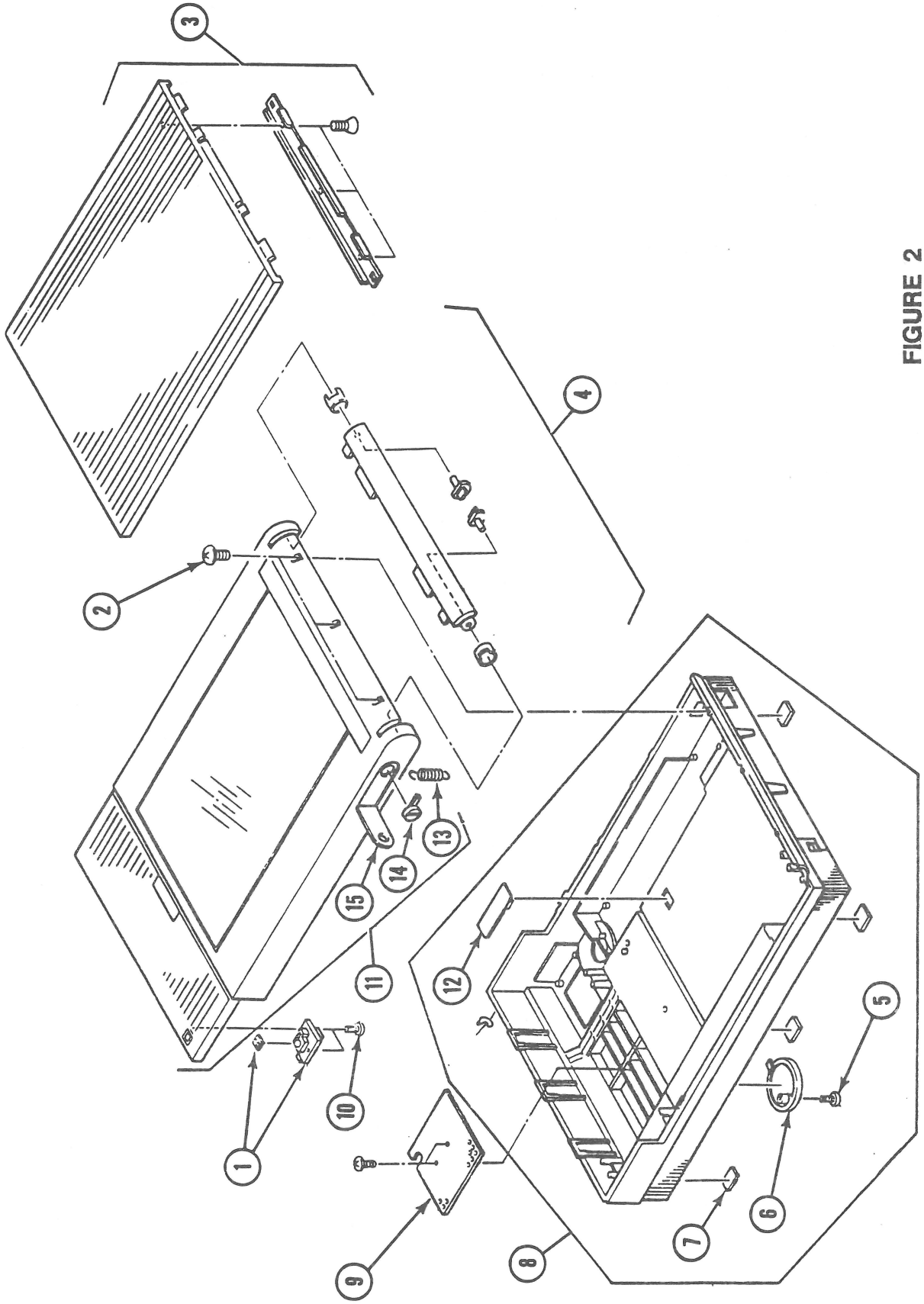


FIGURE 2

## ❑ COVER ASSEMBLY (Figure 2)

| Item | Part No. | Description |
|---|---|---|
| 1 | 076-0278 | PCB Assembly, Start Scan |
| 2 | 076-0277 | Screw, Pan Head, 3 x 15 (10/pk) |
| 3 | 949-0210 | Cover, Top |
| 4 | 076-0275 | Lid Hinge Assembly |
| 5 | 076-0286 | Screw 2, Cover (10/pk) |
| 6 | 949-0209 | Cover, Switch (10/pk) |
| 7 | 076-0273 | Foot, Rubber (10/pk) |
| 8 | 949-0208 | Cover, Bottom Assembly |
| 9 | 949-0226 | Cover, Interior |
| 10 | 076-0301 | Screw, Tapping 3 x 8 (10/pk) |
| 11 | 949-0206 | Cover, Assembly with Glass |
| 12 | 076-0298 | Holder, Ribbon Cable (5/pk) |
| 13 | 076-0322 | Spring, Slide (10/pk) |
| 14 | 076-0272 | Button Lamp Lock (5/pk) |
| 15 | 076-0314 | Cover, Lamp (5/pk) |

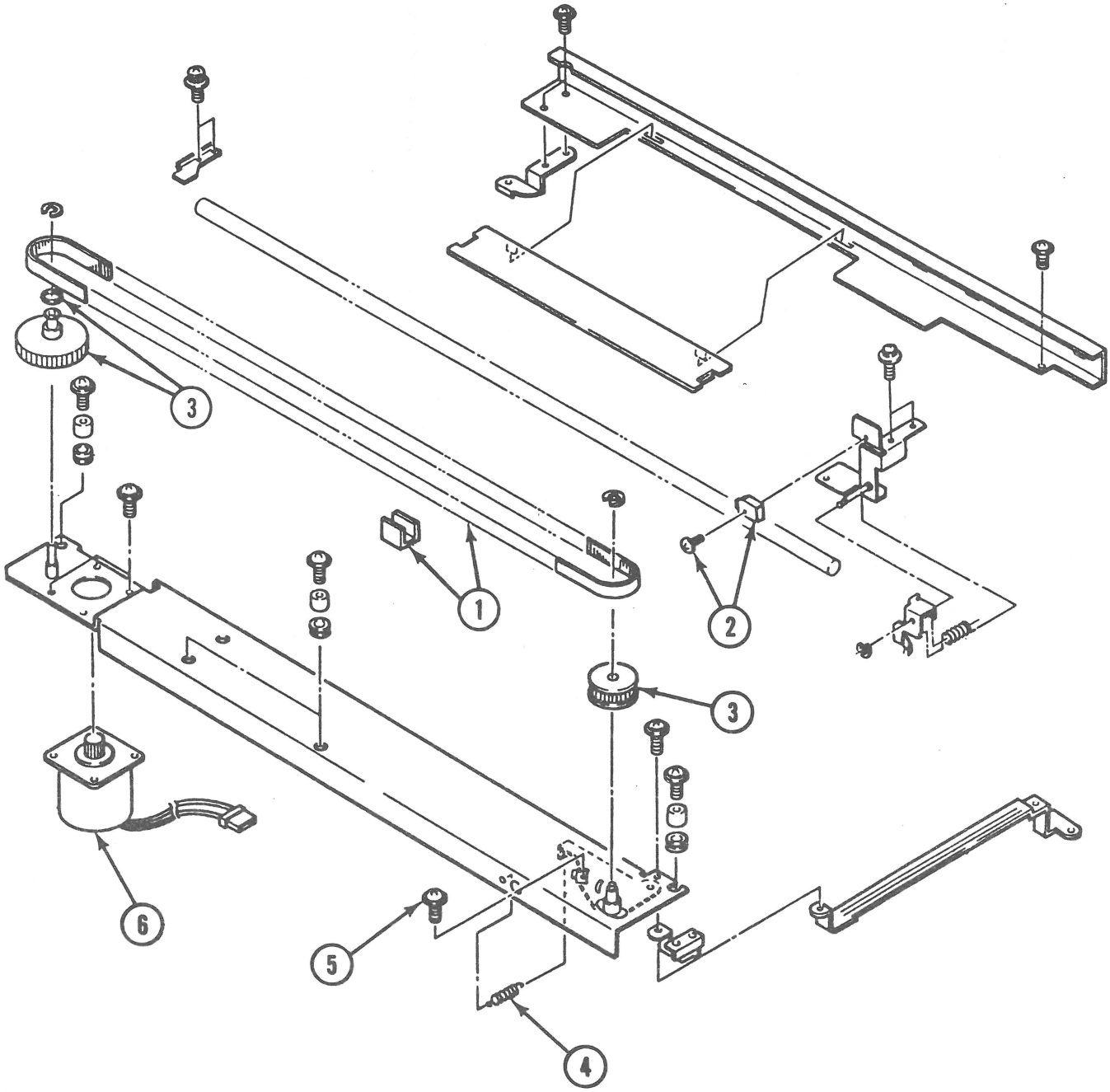


**FIGURE 3**

## ❑ CARRIER ASSEMBLY (Figure 3)

| Item | Part No. | Description |
|---|---|---|
| 1 | 076-0323 | Drive Belt Assembly |
| 2 | 076-0291 | Switch, Limit Assembly |
| 3 | 076-0290 | Carrier Block, Gears/Pulleys (5/pk) |
| 4 | 076-0312 | Spring, Belt Tension (10/pk) |
| 5 | 076-0293 | Screw, Double Sems 3 x 6 (10/pk) |
| 6 | 959-0037 | Motor Carrier Assembly |

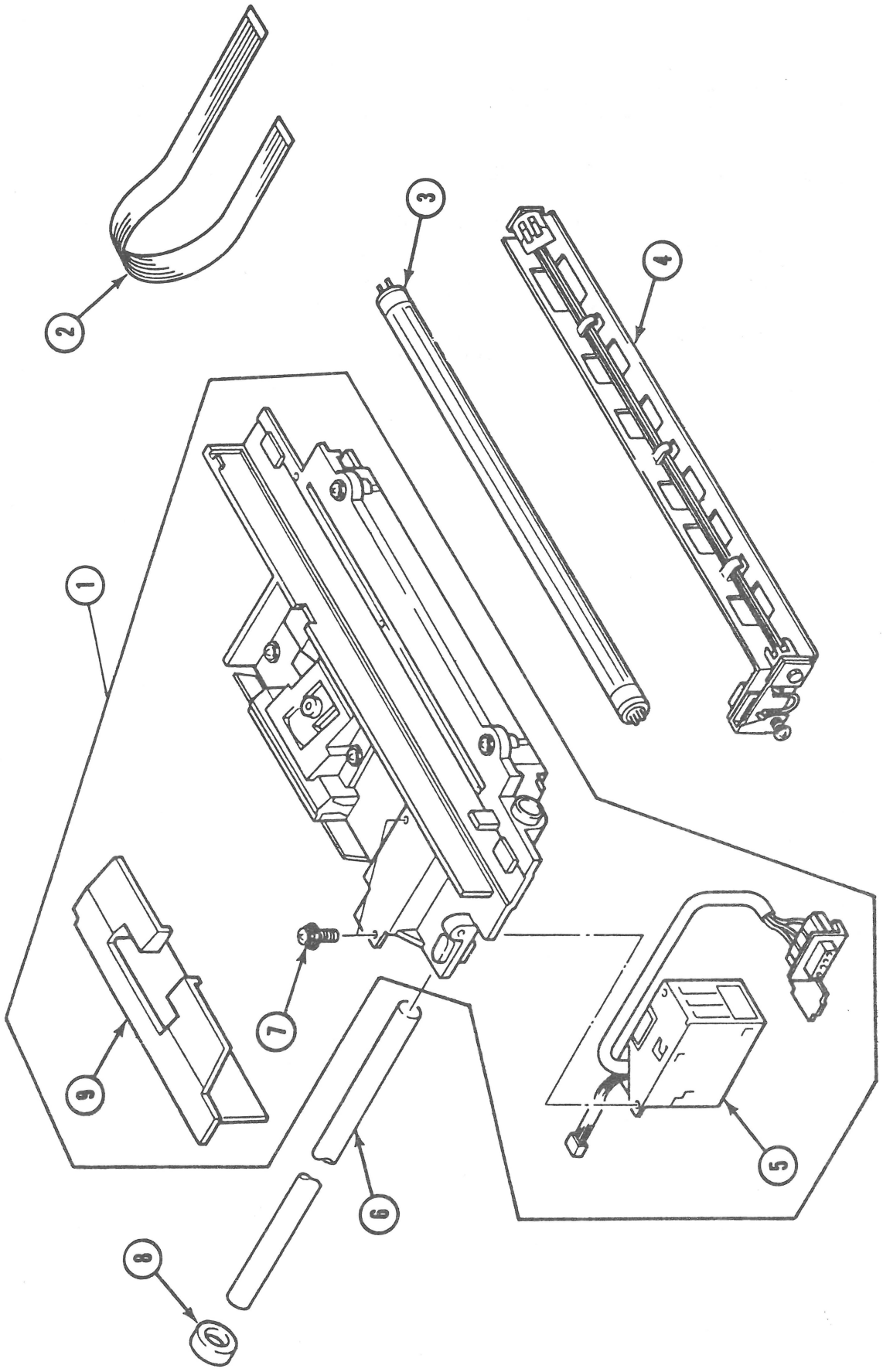


FIGURE 4

## ❑ OPTICAL ASSEMBLY (Figure 4)

| Item | Part No. | Description |
|---|---|---|
| 1 | 661-0449 | Optical Assembly |
| 2 | 936-0043 | Cable, Optical Assembly/Power Supply |
| 3 | 938-0005 | Lamp |
| 4 | 983-0008 | Holder, Lamp |
| 5 | 076-0280 | Inverter Assembly |
| 6 | 699-0514 | Shaft, Carrier, Scanner |
| 7 | 076-0292 | Screw, Double Sems 3 x 10 (20/pk) |
| 8 | 076-0313 | Stopper, Carrier (10/pk) |
| 9 | 949-0211 | Cover, CCD PCB |

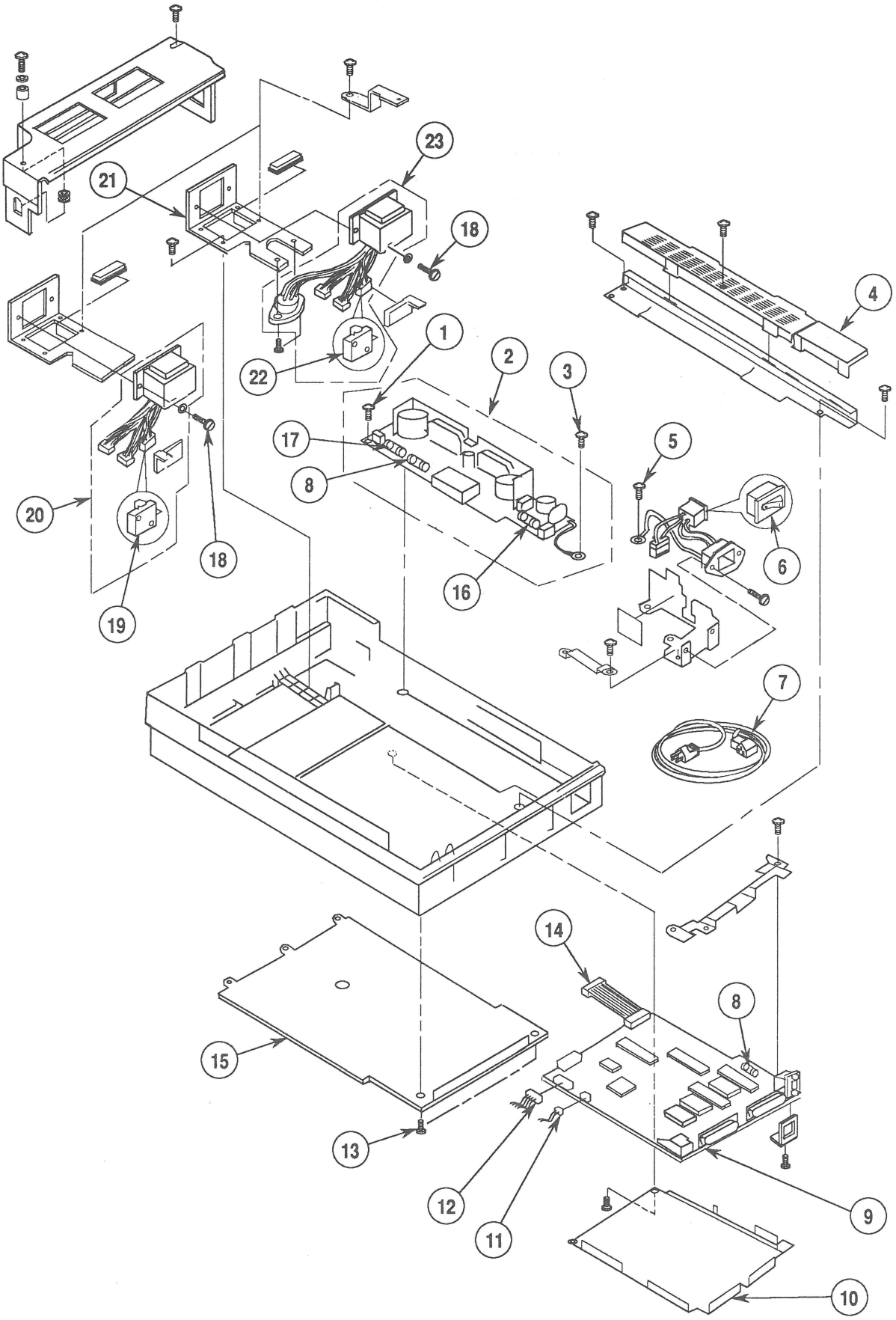


**FIGURE 5**

## ❑ POWER SUPPLY & PCB (MAIN, PS) ASSEMBLIES (Figure 5)

| Item | Part No. | Description |
|---|---|---|
| 1 | 076-0301 | Screw, Tapping 3 x 8 (10/pk) |
| 2 | 661-0431 | Power Supply Board |
| 3 | 076-0293 | Screw, Double Sems 3 x 6 (10/pk) |
| 4 | 949-0214 | AC Inlet Cover |
| 5 | 076-0294 | Screw, Sems 4 x 6 (10/pk) |
| 6 | 937-0032 | Switch, On/Off Assembly |
| 7 | 590-0380 | Cord, Power AC, Smoke, 110 V |
| 8 | 076-0284 | Fuse, 1A, 250V-1.0A (10/pk) |
| 9 | 661-0534 | Main Logic Board—Rev. B |
| 10 | 948-0128 | Shield, Main Logic Board |
| 11 | 936-0045 | Cable, Limit Switch Assembly |
| 12 | 936-0044 | Cable, Scan Switch Assembly |
| 13 | 076-0286 | Screw 2, Cover (10/pk) |
| 14 | 936-0047 | Cable, Power Supply Board |
| 15 | 948-0037 | Cover, Main Logic Board |
| 16 | 076-0283 | Fuse, 2A, 250V-2.0A (10/pk) |
| 17 | 076-0285 | Fuse, 3A, 250V-3.0A (10/pk) |
| 18 | 076-0325 | Screw, Double Sems 4 x 8 (10/pk) |
| 19 | 076-0300 | Switch, Cover Interlock, 110 V |
| 20 | 915-0038 | Transformer Assembly, 110 V |
| 21 | 948-0134 | Transformer Bracket, 100/240 V |
| 22 | 076-0315 | Cover Interlock Switch, 220/240 V |
| 23 | 915-0039 | Transformer Assembly, 100/240 V |

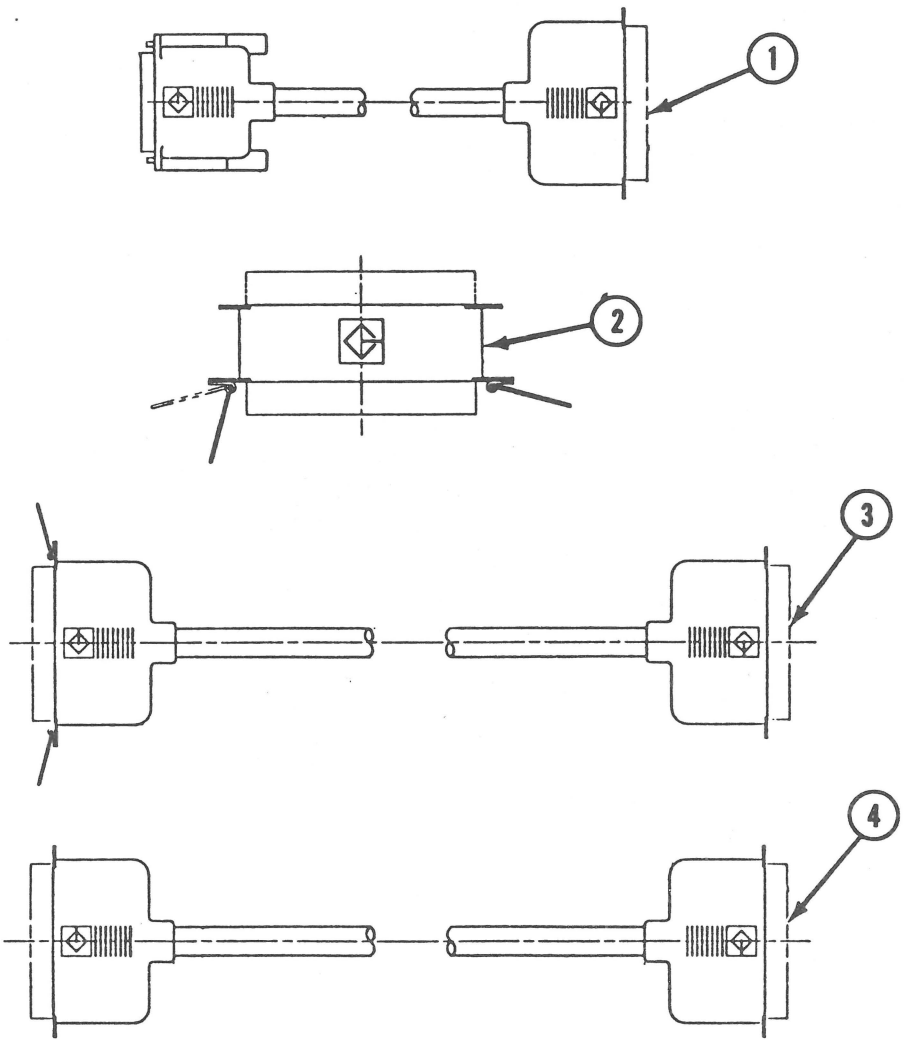


**FIGURE 6**

## ❑ CABLES (Figure 6)

| Item | Part No. | Description |
|---|---|---|
| 1 | 658-8031 | System Cable |
| 2 | 658-8032 | Terminator Cable |
| 3 | 658-8033 | Extender Cable |
| 4 | 658-8034 | Peripheral I/F Cable |

Apple Technical Procedures

# StyleWriter

## Technical Procedures

## ❑ TABLE OF CONTENTS


**Section 1 – Basics**

1.2 Introduction
1.2 Features
1.4 Specifications
1.6 Parts Identification
1.7 Summary of Parts Functions
1.8 Theory of Operation
1.8 Introduction
1.8 Print Cycle
1.9 Power Supply
1.10 Main Logic Board
1.10 Interface
1.11 Data Flow
1.12 Ink Jet Cartridge
1.15 Safety and Handling
1.15 High-Temperature Components
1.15 Fragile Plastic Parts
1.15 Ink Stains
1.16 Electrostatic Discharge (ESD) Prevention
1.16 Additional Safety Tips
1.17 Ink Cartridge
1.17 Protective Functions of the Printer
1.18 Installing the Ink Cartridge
1.18 Purging the Ink Cartridge
1.19 Removing the Ink Cartridge
1.19 Cartridge Shelf Life
1.20 Printer Hardware Setup
1.22 Software Installation
1.23 Paper Setup
1.23 Connecting the Cut Sheet Feeder
1.24 Loading Paper
1.27 Operation Panel
1.27 Buttons
1.28 Indicator Lights
1.29 Power-On, Self-Test, and Test Prints
1.29 Power-On
1.29 Logic and Serial Loopback Self-Tests
1.29 User Test Print
1.30 Print Quality Test Print

**Section 2 – Take-Apart**

2.2 Take-Apart Flowchart
2.3 Introduction
2.3 About This Section
2.3 Materials Required
2.5 Front Access Cover
2.7 Lower Access Cover
2.9 Main Logic Board
2.11 Printer Frame Assembly
2.13 Operation Panel Assembly and Cable
2.15 Cartridge Hook
2.17 Forms Thickness Lever
2.19 Paper Sensor
2.21 Platen Cover and Rollers
2.22 Rear Cover
2.23 Fuse
2.24 Cut Sheet Feeder Output Tray Size Extension
2.25 Cut Sheet Feeder Output Tray Extension Guide and Rod Support
2.26 Cut Sheet Feeder Output Tray and Base

**Section 3 – Troubleshooting**

3.2 Introduction
3.2 Preliminary Checklist
3.3 How to Use the Symptom/Cure Chart
3.4 Symptom/Cure Chart
3.4 Status Light Problems
3.4 Print Problems
3.6 Carrier Movement Problems
3.6 Paper Feed Problems
3.7 Miscellaneous Problems

**Illustrated Parts List**

IPL.3 Exploded View (Figure 1)

©Apple Computer, Inc., 1991. No portion of this document may be reproduced in any form without the written permission of Apple Computer, Inc.

Apple, the Apple logo, Macintosh, and StyleWriter are registered trademarks of Apple Computer, Inc.

TrueType and QuickDraw are trademarksof Apple Computer, Inc.

Helvetica and Times are registered trademarks of Linotype Co.

3M is a registered trademark of Minnesota Mining and Manufacturing Co.

Apple Technical Procedures

# StyleWriter

## Section 1 – Basics

## ❑ CONTENTS


1.2 Introduction
1.2 Features
1.4 Specifications
1.6 Parts Identification
1.7 Summary of Parts Functions
1.8 Theory of Operation
1.8 Introduction
1.8 Print Cycle
1.9 Power Supply
1.10 Main Logic Board
1.10 Interface
1.11 Data Flow
1.12 Ink Jet Cartridge
1.15 Safety and Handling
1.15 High-Temperature Components
1.15 Fragile Plastic Parts
1.15 Ink Stains
1.16 Electrostatic Discharge (ESD) Prevention
1.16 Additional Safety Tips
1.17 Ink Cartridge
1.17 Protective Functions of the Printer
1.18 Installing the Ink Cartridge
1.18 Purging the Ink Cartridge
1.19 Removing the Ink Cartridge
1.19 Cartridge Shelf Life
1.20 Printer Hardware Setup
1.22 Software Installation
1.23 Paper Setup
1.23 Connecting the Cut Sheet Feeder
1.24 Loading Paper
1.27 Operation Panel
1.27 Buttons
1.28 Indicator Lights
1.29 Power-On, Self-Test, and Test Prints
1.29 Power-On
1.29 Logic and Serial Loopback Self-Tests
1.29 User Test Print
1.30 Print Quality Test Print

# ❑ INTRODUCTION

## Features

The StyleWriter® printer, which is compatible with all Macintosh® computers (except the Macintosh 128K, 512K and XL), is designed with thermal ink jet technology. The features of this new, low-cost printer for the Macintosh family are listed below.

### *Ink Jet Technology*

Ink jet technology utilizes a disposable print cartridge that contains the ink jet print head and ink. The contact points between the cartridge and the cartridge carrier on the printer frame assembly transmits the information to the ink jets and controls their outflow of ink. The quick-drying black ink and the printer's high resolution (360 dots per inch) provide a fine quality printed output. The ink cartridge can print up to 500 pages.

### *Two Print Methods*

From the print menu, the user chooses one of two print qualities:

- **Best** – about 1/3 page per minute with 360 dots per inch
- **Faster** – about 2/3 page per minute with 180 dots per inch; includes an ink-saving mode

The actual speed depends upon the complexity of the images on the page—graphics, especially complex ones, take longer to print than text.

### *TrueType Fonts*

The StyleWriter requires TrueType™ fonts for high-quality printouts. The installation disks that come with the printer include the fonts, which the user installs on the computer that he or she will use with the StyleWriter.

TrueType fonts require a Macintosh computer with system software 6.0.7 (or higher). The TrueType fonts include Times®, Helvetica®, and Courier (with plain, italic, bold, and bold italic available for these fonts), plus the Symbol font, which is useful in writing mathematical and scientific notations. TrueType fonts are "scalable" or "outline" fonts. Each font contains detailed coordinate information that enables the computer system to scale the font to any size. The user does not have to install different sizes of the font—it's "one size fits all."

The StyleWriter printer can also use fixed-size ("bitmapped") fonts; if there is a bitmapped font with the same name as a TrueType font installed on the system, the printer defaults to the TrueType font.

### *Cut Sheet Feeder*

The cut sheet feeder attaches to the printer to automatically feed a cut sheet from the tray to the printer. Up to 50 sheets (of 20 lb paper) can be placed on the tray. (Single sheets may be fed into the printer manually through the front feed slot. Envelopes, labels, and transparencies must be fed manually through the rear feed slot.)

### *Built-in Diagnostics*

The printer has a built-in self-diagnostic function to analyze logic and hardware failures. The status lights indicate the results. The printer also performs test prints when directed to do so. The diagnostic tests and prints are:

- Power-up Logic Test – Checks circuitry on the logic board. This test runs automatically after power-up.
- Serial Loopback Test – Checks the serial interface circuitry. The servicing technician initiates this test.
- User Test Print – Provides a visual aid for diagnosing print quality. The user initiates this print.
- Technician Print Quality Test Print – Provides a detailed and calibrated visual aid for diagnosing print quality. The servicing technician initiates this print.

(See "Power-On, Self-Test, and Test Prints," later in Basics, for instructions on performing the serial loopback test and the test prints.)

## ❑ SPECIFICATIONS

| | |
|---|---|
| Printing Method | On-demand serial thermal ink jet: Replaceable ink cartridge, which contains the print head with 64 ink jet nozzles. Cartridge contains approx. 20 grams (0.9 oz.) of black ink. |
| Cartridge Capacity | Prints up to 500 pages |
| Print Resolution | 360 dpi (dots per inch) in Best mode<br>180 dpi in Faster mode |
| Printing Speed | 1/3 page per minute in Best mode<br>1/2 page per minute in Faster mode<br>(actual speed depends on images printed) |
| Line Feed Speed | 200 milliseconds/line at 1/6" line |
| Printing Direction | Unidirectional in Best mode<br>Bidirectional in Faster mode |
| Image Utility | Allows conversion of 300 dpi halftone images (PICT format) for printing at 360 dpi |
| Printing Characters (not part of printer, but provided on installation disks for the computer) | TrueType font families:<br>Times (plain, bold, italic, bold italic)<br>Helvetica (plain, bold, italic, bold italic)<br>Courier (plain, bold, italic, bold italic)<br>Symbol<br>(supports additional TrueType fonts from Apple and other suppliers; also supports bitmapped fonts) |
| Printer RAM | 64K (8K used for buffer) |
| Input Buffer | 8K |
| Interface | Apple-style RS-422/RS-423 asynchronous serial (1 start bit, 8 data bits, 1 stop bit), 57.6K baud |
| Acoustic Noise Level | Under 50 dB(A) from operator position |

| | |
|---|---|
| Paper Feed Method | Manual: Front feed for single or heavy (24 lb) sheets; Rear feed for labels, envelopes, & transparencies<br>Automatic: Cut sheet feeder (up to 50 sheets) |
| Paper Capacity | Cut sheet feeder tray: 50 cut sheet input (20 lb paper)<br>Output tray: 25 cut sheet output |
| Print Width & Height | Maximum printable line: 203.2 mm (8.0 inches)<br>Minimum top & bottom margins: 6.35 mm (0.25 inch)<br>Minimum left & right margins: 6.35 mm (0.25 inch) |
| Paper Sizes (printable area) | US letter: 8" x 10.5"<br>Legal: 8" x 13.5"<br>A4: 98 mm x 285 mm (7.8" x 11.2")<br>#10 envelope: 8" x 3.6" |
| Paper Specifications | Weight: 16 lb (52 g/m²) to 24 lb (90 g/m²)<br>Recommended: 20 lb (75 g/m²);<br>Thickness: 0.2 mm max.<br>Accepts most letterhead and colored stock and medium-weight photocopier transparencies & labels<br>(Recommended: 3M™ CG3480 transparency film) |
| Operating Environment | Temperature: 15°C to 30°C (59°F to 86°F)<br>Humidity: 20% to 70% RH, noncondensing<br>(Keep printer away from wind, fans, and heat) |
| Power Supply | AC adapter delivering 9.5 VDC |
| Input Electrical Requirements | USA/Canada: AC 120 VAC 60 Hz<br>Japan: AC 100 VAC 50/60 Hz<br>UK/Australia: AC 240 VAC 50 Hz<br>Europe: AC 220 VAC 50 Hz |
| Power Consumption | 23 W maximum at 120 V<br>25 W maximum at 220 V |
| Physical Dimensions | Height with rod support installed: 32 cm (12.5 in.)<br>Width: 33.6 cm (13.25 in.)<br>Depth with output tray closed: 23 cm (9 in.)<br>Weight with sheet feeder attached: 3.4 kg (7.5 lbs) |

## ❑ PARTS IDENTIFICATION

**Figure 1-1** shows the major modules and assemblies of the printer and the location of the connectors and the fuse.

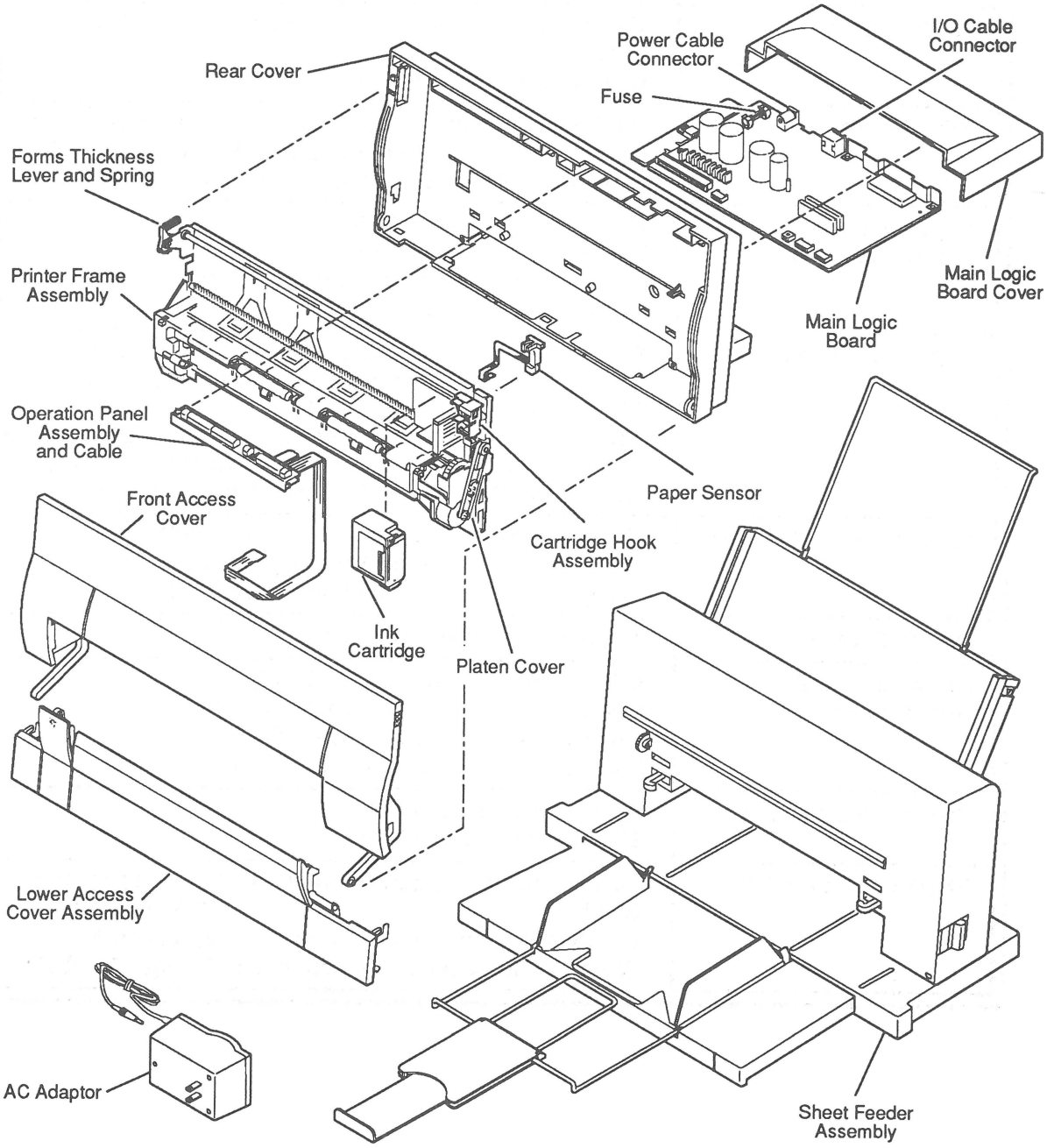


**Figure 1-1 Major Modules and Assemblies**

## ❑ SUMMARY OF PARTS FUNCTIONS

**Ink Cartridge**

The replaceable ink cartridge contains the ink and the thermal jet print head with its 64 nozzles.

**Logic Board**

The logic board controls all the operations of the printer.

**Printer Frame Assembly**

The printer frame contains all of the components necessary to move the carriage and the paper. The carriage holds the print head (in the ink cartridge) and moves it over the paper as printing progresses. The printer frame components are listed below:

- Cartridge carriage – Provides the mount for the ink cartridge and connects the ink cartridge electrical circuits to the logic board.
- Carriage motor – Moves the carriage horizontally along the carriage shaft and drives the purge unit.
- Cartridge hook assembly – Secures the ink cartridge to the carriage, and allows the user to remove and replace the ink cartridge.
- Forms thickness lever – Adjusts to accommodate paper thickness.
- Paper sensor – Detects when the paper has arrived in the proper position for printing. If the sensor detects no paper, the sensor sends a signal and the Error light on the operations panel turns on.

**Operation Panel Assembly**

The operation panel contains the control buttons and status lights, which enable the user to produce a test print, start and stop the printing process, and interpret error conditions.

**AC Adapter**

The AC adapter delivers 9.5 VDC power to the logic board. Different types of AC adapters are available to suit the voltages in different regions.

**Cut Sheet Feeder**

The cut sheet feeder attaches to the printer and feeds single-sheet paper automatically through the printer. The extendable output tray on the cut sheet feeder receives the pages as they come out of the printer and keeps them neatly stacked.

# ❑ THEORY OF OPERATION

## Introduction

Troubleshooting Apple products can be approached in different ways; Apple usually recommends both logical troubleshooting and sequential module swapping (a trial-and-error approach). But random module swapping is not recommended for the StyleWriter printer because of the fragility of its parts. So, to troubleshoot this printer, use logical trouble-shooting to identify the defective module before you remove it. This section will help you understand how the StyleWriter printer works—so that you can more easily diagnose and repair problems.

## Print Cycle

When the user gives the Print command, the Macintosh sends a bitmap of each page through the serial connection to the printer. A bitmap is a dot-by-dot guide to each letter or image on the page. The bitmap is created in Quick-Draw™, the computer's internal graphics language. The StyleWriter printer reconstructs the bitmap and activates the ink cartridge nozzles to match the bitmap, dot for dot. The StyleWriter can address 360 dot positions per inch (130,000 dots per square inch), or about 10.7 million dot positions per page.

The following list describes the basic operation of the StyleWriter printer as a total unit, from the time the user initiates a print command. (Note that many of these operations occur simultaneously.)

1. The user gives the Print command to the computer, which sends a printer initialization command to the printer.

2. The printer checks for ready status: if no error condition is detected, the paper sensor checks for the presence of paper; if paper is present, the printer gives the computer a Ready signal.

3. The purge unit cleans the ink cartridge before printing begins (and once every minute during printing).

4. The computer sends a bitmap of each page through the serial connection to the printer logic board, where the bitmap is interpreted and sent to the print head via the logic board ribbon cable.

5. The sheet feed motor rotates the rollers to advance the paper one line at a time. The carriage motor moves the print head across the paper and transfers ink to the paper to reproduce the bitmap.

6. When the printing signals stop, the carriage motor takes the ink cartridge to its home position and activates the purge unit, which cleans and caps the ink cartridge nozzles.

The following sections explain in more detail how each system in the printer performs its function.

## Power Supply

The external power supply is an AC adapter with an attached power cord. This adapter provides 9.5 VDC to the logic board of the printer.

After passing through a 2.5-amp fuse and noise filter on the logic board, the 9.5 volts of DC input power goes to two DC/DC converters and a voltage regulator for generation of the required internal power supply voltages. This internal power supply area on the logic board provides:

- +5 VDC (Vcc) – Provides power for all the printer digital logic, including the CPU and the power-on reset IC. The Vcc also provides power for the power switch pull-up—even when the power is off (this power provision is necessary since the power switch must be read even when the power is off).

- +14 VDC (Vpp) – Supplies power to the carriage motor driver and paper feed motor. The Vpp reference voltage returns to the DC/DC converter IC, which regulates Vpp voltage.

- A heater voltage (VH) output – Operates the print head by suppling power to the SEG driver IC, the COM driver transistors, and the ink jet cartridge warm-up heater transistor. The exact VH voltage—+22.2 VDC, +23.0 VDC, +23.8 VDC, or +24.6 VDC—is selectable, based on the status of jumpers on the printhead itself. The voltage selection feature compensates for variances in manufacturers' tolerances for the cartridge. The DC/DC converter control IC determines which VH voltage to use, based on a reference voltage provided by the ink jet cartridge.

- -5 VDC (Vee) – Produces power for use in the interface IC.

## Main Logic Board

The main logic board is the heart of the printer. Besides distribution of the voltages, the logic board also handles the logic that controls the printer and creates the drive signals for the ink jet cartridge. All signals that affect the operation of the printer go to the logic board.

The logic board has the following circuitry:

- ROM (Read-Only Memory) – The ROM contains all the CPU instructions necessary to operate the printer, including the built-in start-up and self-test routines.

- RAM (Random-Access Memory) – The two 64K X 4-bit DRAMs provide a 10K receive buffer, a two-line print buffer, and a work area.

- CPU (Central Processing Unit) – The 8-bit CPU operates the printer and has a 10 MHz clock. The CPU provides paper drive and head positioning signals and communicates with the printer controller ICs via a 20-bit address bus and an 8-bit data bus. The CPU reads head-positioning signals and monitors some switch functions and a temperature sensor.

- Printer Controller – The printer controller contains the following:

  - Interface controller

  - DRAM (Dynamic Random-Access Memory) controller

  - Print head controller

  - H-V (Horizontal-Vertical) converter

  - Address decoder

  A 20 MHz crystal clocks the printer controller independently to provide proper timing for the interface and DRAM bus. A 2.5 MHz clock in the CPU controls CPU bus timing.

## Interface

Serial port interfacing is through 26LS32/26LS30 receiver/transmitter ICs.

## Data Flow

The data flow in the StyleWriter printer occurs as follows:

1. The printer controller receives a bitmap of each page from the host computer over the RS-422/423 interface and stores it in the receive buffer area of the DRAM.

2. The MPU (Main Processing Unit) analyzes, decompresses, and edits the bitmap data and stores the edited data in the work area of DRAM.

3. Next, the MPU converts the bitmap data from horizontal to vertical in the H-V (Horizontal-Vertical) conversion section of the printer controller and stores the converted data in the print buffer area of DRAM.

4. While the H-V conversion is taking place, the MPU determines the number of each print dot and supplies that number to the heater control circuit for the print head.

5. From DRAM, a printer initialize signal (INIT) goes to the printer controller and CPU, and the printer controller signals the busy status to the operations panel.

6. The CPU initializes the printer and sends the bitmap data in the DRAM print buffer to the print head via the printer controller.

7. The print head controller converts the bitmapped print data to COM and SEG head drive signals that activate the 8 x 8 (64) nozzle matrix.

## Ink Jet Cartridge

The ink jet cartridge contains all the components required for the generation of the ink dot pattern used in printing. These components include the ink sponge and ink jet head unit, along with the cartridge body and covers. The ink jet printing system prints characters and graphics by firing ink drops at the paper from thin nozzles. Heating the ink in these nozzles produces bubbles that quickly expand and eject the ink. The heat is generated by applying electrical pulses to the heating elements built into each nozzle.

The structure of the ink cartridge is shown below (**Figure 1-2**).

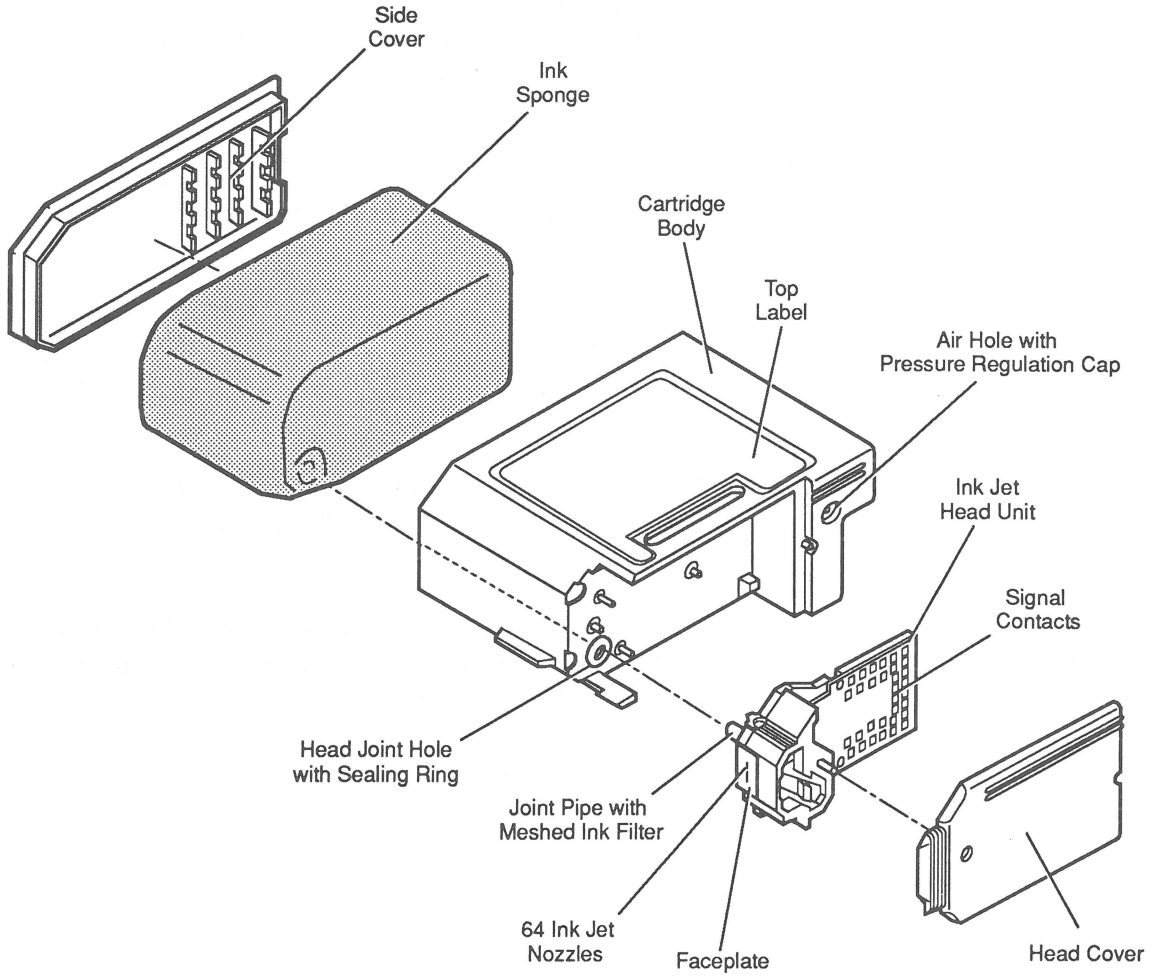


**Figure 1-2 Ink Cartridge Structure**

*Ink Jet Head Unit Structure*

The ink in the ink sponge passes through a mesh ink filter to remove dust and flows to the ink jet nozzles through a joint pipe. When the head drive current flows through the heater plate of a nozzle, the ink boils and many small bubbles accumulate into a large bubble. The head drive current shuts off before the drop of ink ejects from the nozzle, but the bubble continues to grow due to latent heat on the heater—and the drop of ink ejects from the nozzle at about 12 meters/second. The loss of the ink creates a vacuum that draws fresh ink from the ink sponge (**Figure 1-3**).

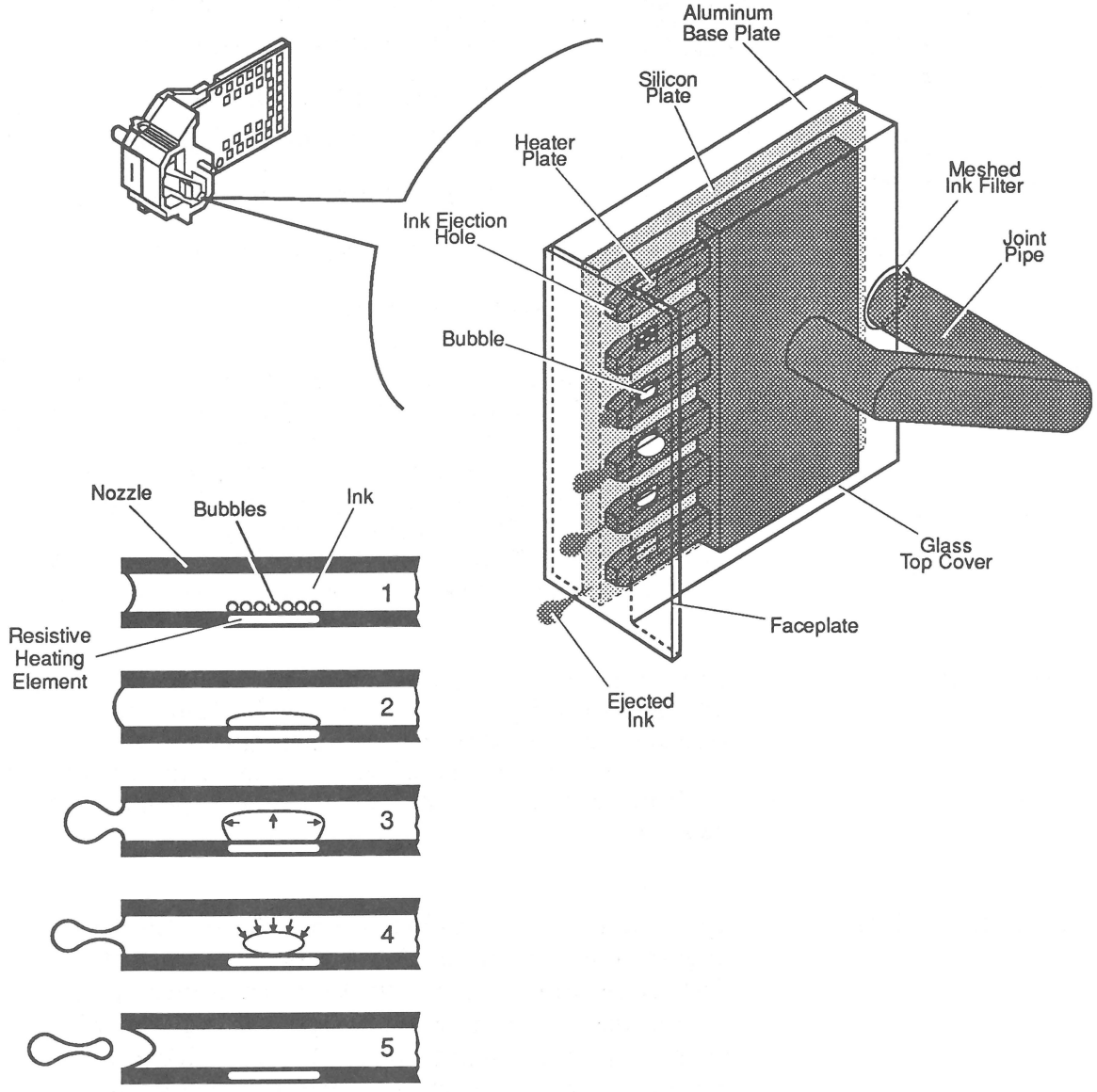


**Figure 1-3 Ink Jet Operation**

*Nozzle Arrangement*

The ink jet nozzles are arranged in the print head in a vertical line of 64 nozzles spaced at 1/360th of an inch. The 64 head-heater plates are controlled by the matrix of 8 COM and 8 SEG signals from the logic board (**Figure 1-4**).

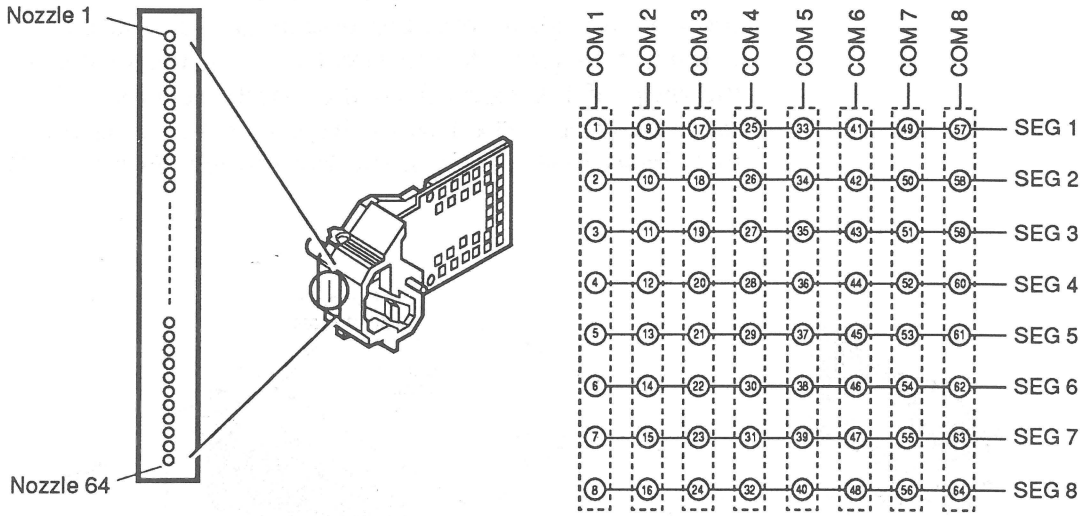


Mechanical Nozzle Arrangement

Electrical Nozzle Arrangement

**Figure 1-4 Nozzle Arrangement**

*Printing Signals*

The COM signal connects circuits COM1 to COM8 to the head drive power supply (VH) so the 64 nozzles are ready to print in groups of eight. While the COM signal connects to the head drive power (VH), which applies heater voltages to the heater plate, the SEG signal connects the SEG1 to SEG8 circuits to ground. The combination of SEG and COM signals creates the 8 X 8 matrix, which equates to the 64 print head drive signals.

*Heater Voltage*

The printer corrects any manufacturing variations in the ink cartridges by selecting one of the four heater voltages (used to determine ink jet speed). A pattern of contacts on the printed circuit area of the print head indicates the heater voltage ID for any specific print head unit.

*Temperature Control*

The optimum temperature of the ink jet cartridge for high-quality printing is 73.4°F (23°C). The print head has temperature sensors and warm-up heaters on the silicon plate. A sensor on the printer logic board determines the temperature of the cartridge from the ambient room temperature. When the sensor detects a temperature lower than 68°F (20°C), the print head nozzles are warmed by the applying the heater voltage to the head unit, which in turn heats the nozzles.

## ❑ SAFETY AND HANDLING

### High-Temperature Components

The temperature of the regulator IC (Q14) and transistor (Q13) that produce the logic circuit Vcc rises to about 140°F (60°C) when the printer is on. Do not touch these components when the printer is on.

### Fragile Plastic Parts

The StyleWriter printer has many plastic parts. Be careful not to bend or break any of the plastic tabs when taking apart the printer. Most of the plastic parts are made of a hard plastic that contains glass fiber; the viscosity is low to increase the precision of the tooling. As a result, the plastic tabs are very easy to break. Use precision screwdrivers or tweezers for take-apart and do not apply excessive force when releasing a tab.

### Ink Stains

The ink used in the ink cartridge is not toxic but contains isopropyl alcohol 67-63-0, which means the ink must be kept out of mouths and eyes. Keep the ink cartridge out of the reach of children.

The ink contains an indelible dye that stains clothing. To avoid getting ink stains on your hands, clothing, tools, and work area, do not shake the ink cartridge or touch anything in the printer path.

After the printer has been used for several months, ink mist may coat the insides of the front access and lower access covers. To avoid getting ink on your hands, use a damp cloth to wipe away any accumulated ink before you begin servicing the printer.

The ink conducts electricity. If ink leaks onto a mechanical part or the logic board, turn off the printer and disconnect the AC power adapter. Wipe the ink off mechanical parts with a soft cloth. Use tissue paper to clean ink completely from the bottoms of logic board components.

***CAUTION:*** *To avoid circuit damage, wipe away all ink before switching the power on.*

If the printer is picked up, moved, or stored without an ink cartridge in it, the ink remaining in the purge unit may flow backwards and stain the inside of the printer. If the printer has no cartridge, perform the purge operation (under "Purging the Ink Cartridge") three times to clear any remaining ink from the purge unit.

## Electrostatic Discharge (ESD) Prevention

The StyleWriter printer carriage contacts and logic circuitry are sensitive to damage from static electricity that may discharge from your body or clothing. If static electricity is discharged at the carriage contact points, the characteristics of the chip resistors (R4, R5, R6, and R7) and chip capacitor (C30) used in the heater voltage select circuit on the logic board may change, and the correct heater voltage for the ink cartridge may not be generated. If the voltage is incorrect, the print quality deteriorates. To prevent such damage, wear a grounding wriststrap or heelstrap and work on a grounded workbench mat when servicing the printer. (For ESD prevention rules, see Section 6, Electrostatic Discharge, under the *You Oughta Know* tab).

## Additional Safety Tips

Follow these additional safety tips to avoid harm to the printer:

- Don't move the carriage manually—you could damage delicate mechanical parts.
- Don't attempt to print anything when the front access door is open—you could cause a paper jam.
- Don't oil the inside of the printer.
- Don't use ammonia-based cleaners on or around the printer—they may react with the plastic.
- Before you unplug the printer, be sure it is switched off—switching the printer off ensures the print head will be capped.

## ❑ INK CARTRIDGE

**Protective Functions of the Printer**

The disposable ink cartridge contains the print head and ink. Both the Apple and the Canon versions of the ink cartridge work in the StyleWriter printer. The printer has automatic maintenance functions (priming, purging, wiping, and capping) that protect the ink cartridge.

*Priming Function*

To prevent the nozzles from clogging, the printer has a priming function that ejects ink from all the nozzles of the cartridge. The priming function works automatically

- When you switch on the Power button
- Before the printing starts
- Every 12 seconds during printing

*Purging Function*

To ensure optimum print quality, the printer also has a purging function that draws 0.1 ml of ink through the ink nozzles to fill them with fresh ink. A purge, with the wiping function (see below), is performed under two conditions: 1) every time the machine is switched on after the AC adapter is connected, and 2) when the printer sits idle for more than 72 hours while switched on and connected to the adapter.

The user can also perform a manual purge, which is necessary to prepare a new ink cartridge for operation. (See "Purging the Ink Cartridge" later in Basics.)

*Wiping Function*

A wiping function, which wipes dust and ink off the cartridge nozzle surfaces with a rubber head wiper, occurs automatically

- After priming or purging
- Every 60 seconds during printing
- Before capping (see below)

*Capping Function*

The printer caps the cartridge nozzles with the purge unit cap after the carriage returns in front of the purge unit. The cap prevents the cartridge from drying up, leaking ink, or collecting dust. The nozzles are capped automatically

- When the printer has not received a print start command in the last five seconds while on-line
- When the printer goes off-line
- Three seconds after you switch off the Power button

## Installing the Ink Cartridge

Do not open the ink cartridge package before you are ready to install the cartridge. After opening the package, carefully remove the head cover and tape that protects the nozzles during shipping and storage. Do not touch or wipe the nozzles. The cartridge cannot be cleaned. Do not leave the cartridge outside the printer without the head cover and sealing tape.

1. Make sure the printer power is off.

2. Open the front access cover.

3. Place the ink cartridge over the mounting post **(Figure 1-5A)**, and push down on the cartridge until it snaps into place **(Figure 1-5B)**.

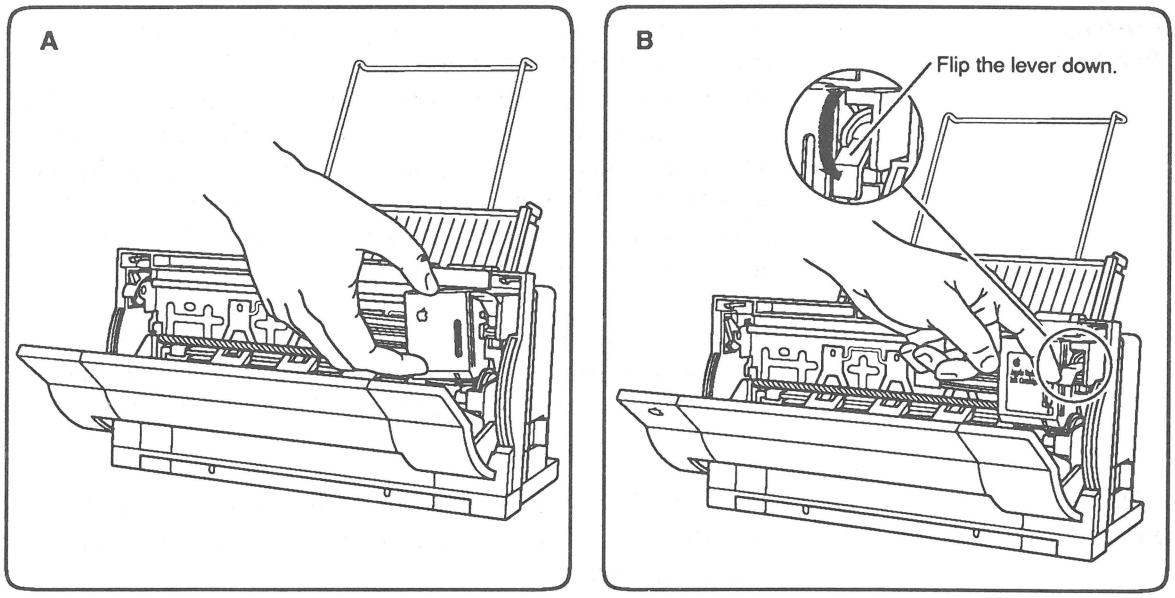


**Figure 1-5 Installing the Ink Cartridge**

4. Close the front access cover.

5. **Perform the manual purge operation before you attempt to print** (see "Purging the Ink Cartridge").

## Purging the Ink Cartridge

Always do a manual purge after you install a new cartridge. To perform a manual purge:

1. Switch off the Power button (the printer must be off before you begin).

2. Press and hold the Ready button.

3. Press the Power button once and release both buttons at the same time.

When finished printing, **always switch the power off using the power button.** After the power is switched off for three seconds, the printer caps the ink cartridge automatically to prevent ink leakage and nozzle clogging. **If you turn off power to the printer by pulling the power adapter cord, the cartridge will not be capped.** If the nozzles are not capped, they may become clogged with dry ink, or ink may leak from the cartridge.

## Removing the Ink Cartridge

**Leave the cartridge in place when the printer is not in use.** Also leave the cartridge in place when moving the printer. If the ink cartridge is taken out of the printer, the ink nozzles may dry up and become unusable. Remove the cartridge only to replace it or to service the printer. To remove the ink cartridge,

1. Make sure the power is off.

2. Open the front access cover.

3. Lift the cartridge lever and pull the cartridge off the mounting post.

The print head must be sealed and capped immediately after removal from the printer. Even if the ink cartridge is ready for replacement, the ink may leak out if you do not seal the print head. When installing a new ink cartridge, save the orange tape and end cap to use on the replaced ink cartridge. If you will be using the removed cartridge again, be especially careful to seal the cartridge to prevent the ink from drying and clogging the nozzles. Cellophane tape will not work—the adhesive may clog the nozzles.

## Cartridge Shelf Life

The StyleWriter printer ships with a cartridge installed. Cartridge shelf life is approximately six months once you open the cartridge and install it in the printer, and 18 months while in the package. Expired cartridges will not damage the printer, but may require extensive purging to get good prints.

## ❑ PRINTER HARDWARE SETUP

The *StyleWriter Owner's Guide* contains detailed instructions to the user for setting up and operating the StyleWriter printer. Since you may see problems that are the result of incorrect software installation, we have summarized some important elements of the owner's guide here for your information.

To connect the StyleWriter to a Macintosh computer, make sure the computer is switched off. Attach one end of the peripheral-8 cable to the printer or modem port on the computer. Connect the other end to the serial port on the back of the printer, as shown in **Figure 1-6**.

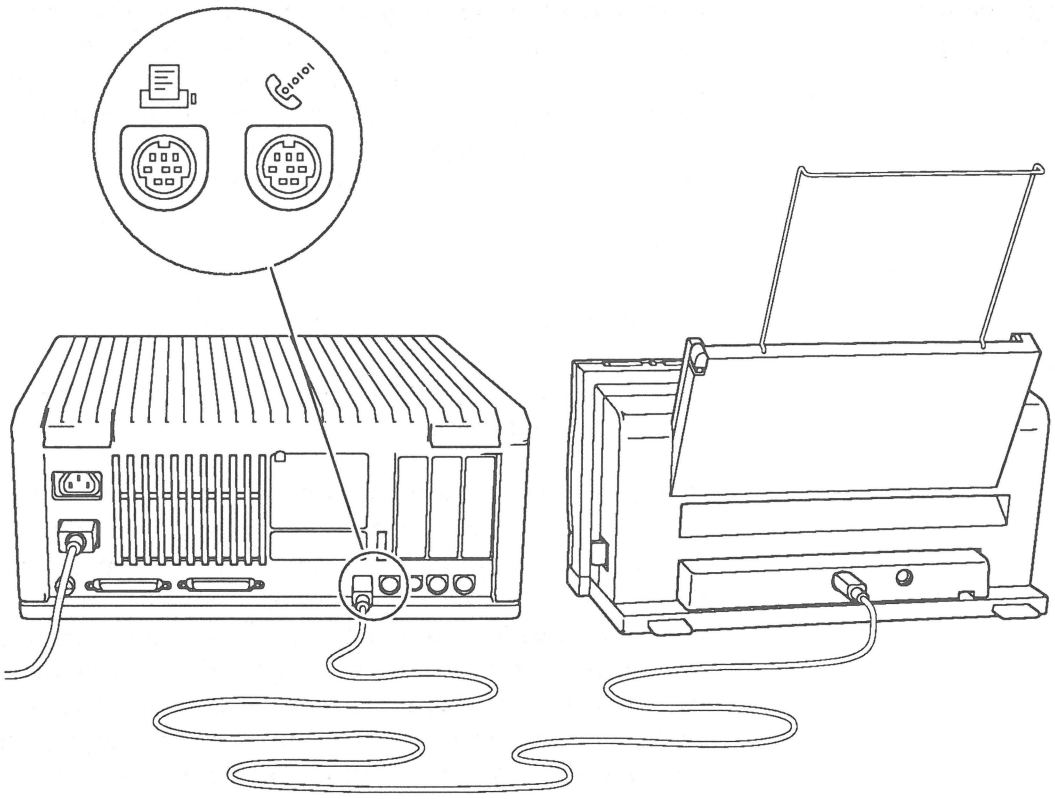

**Figure 1-6 Making the Serial Connection**

Connect the power cord to the StyleWriter; then plug the adapter into a wall outlet as shown in **Figure 1-7**. (Adapters for countries other than the U.S and Japan use a different configuration; the adapter sits between two segments of power cord.)

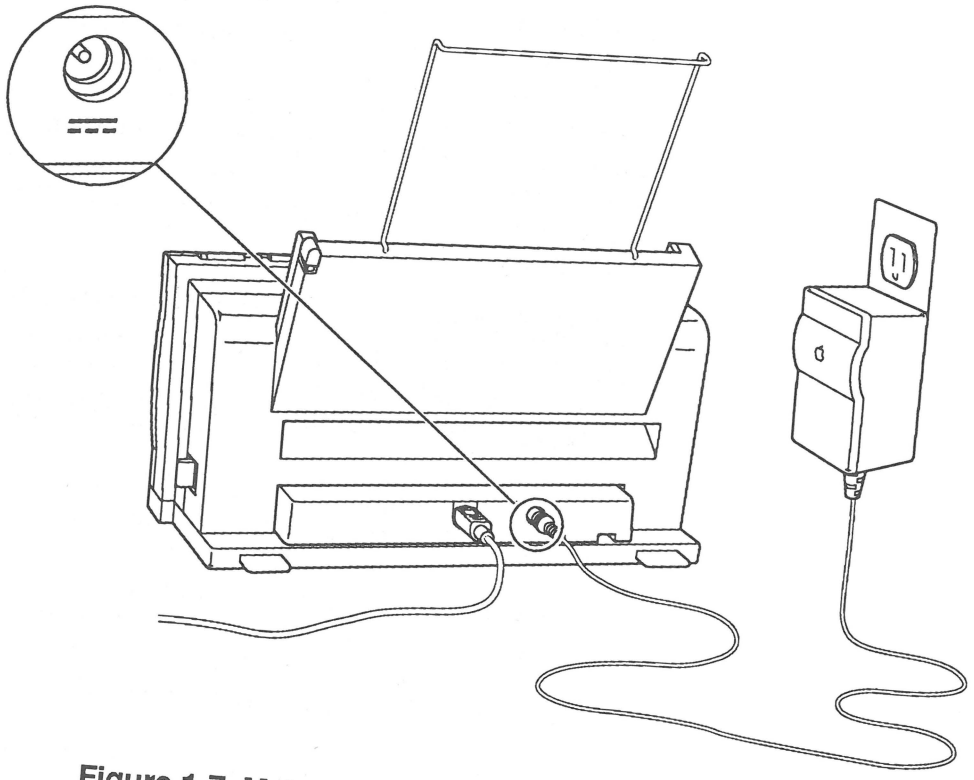

**Figure 1-7 Making the AC Power Connection**

## ❑ SOFTWARE INSTALLATION

The disks that come with the printer accessory kit contain the printer driver, the Installer program, and the TrueType fonts. The StyleWriter can use TrueType and fixed-size (bitmapped) fonts—in fact, the user can have fixed-size and TrueType versions of the same font installed in the system. Keeping both versions of a font takes up more space, but it has two advantages. First, it allows the Macintosh computer to display and print the font correctly, even when memory is low. Second, it prevents old documents that use the fixed-size font from repaginating.

***IMPORTANT:*** *The Macintosh computer used with the StyleWriter printer must have system software 6.0.7 or later. If the customer has an earlier version of the system software, perform a system upgrade before you proceed.*

The Installer program on the *StyleWriter Installation* disk makes the process easy for the user:

1. Boot the installation disk and double-click the Installer icon. Make sure the disk named on the screen is the one on which you want to install the software (if not, click **Switch Disk**).

   The Installer has a custom feature that allows the installation of software that supports other printers besides the StyleWriter. If you click the **Customize** button, you'll see a list of specific items you can select for installation.

   Click **Install** to launch the program. The Easy Install status box appears to keep you informed of progress during the installation.

2. When the *StyleWriter Installation* disk ejects, insert the *TrueType Fonts* disk. (If the Macintosh computer has no hard disk and you are installing on floppy disks, you will have to swap disks a number of times before the process is finished.)

3. When the *TrueType Fonts* disk ejects, follow the instructions and insert the *StyleWriter Installation* disk again. When you see a message reporting that the installation was successful, click **Restart**.

4. Open the Chooser and identify the port (printer or modem) to which you have the printer connected.

## ❑ PAPER SETUP

### Connecting the Cut Sheet Feeder

Make sure the latches on the side of the cut sheet feeder are unlocked (pushed toward the rear of the feeder) (**Figure 1-8A**). Slide the printer in as far as it will go (**Figure 1-8B**) and push the latches forward to lock the sheet feeder in place (**Figure 1-8C**). To unlock the sheet feeder, push back the latches and slide the printer out.

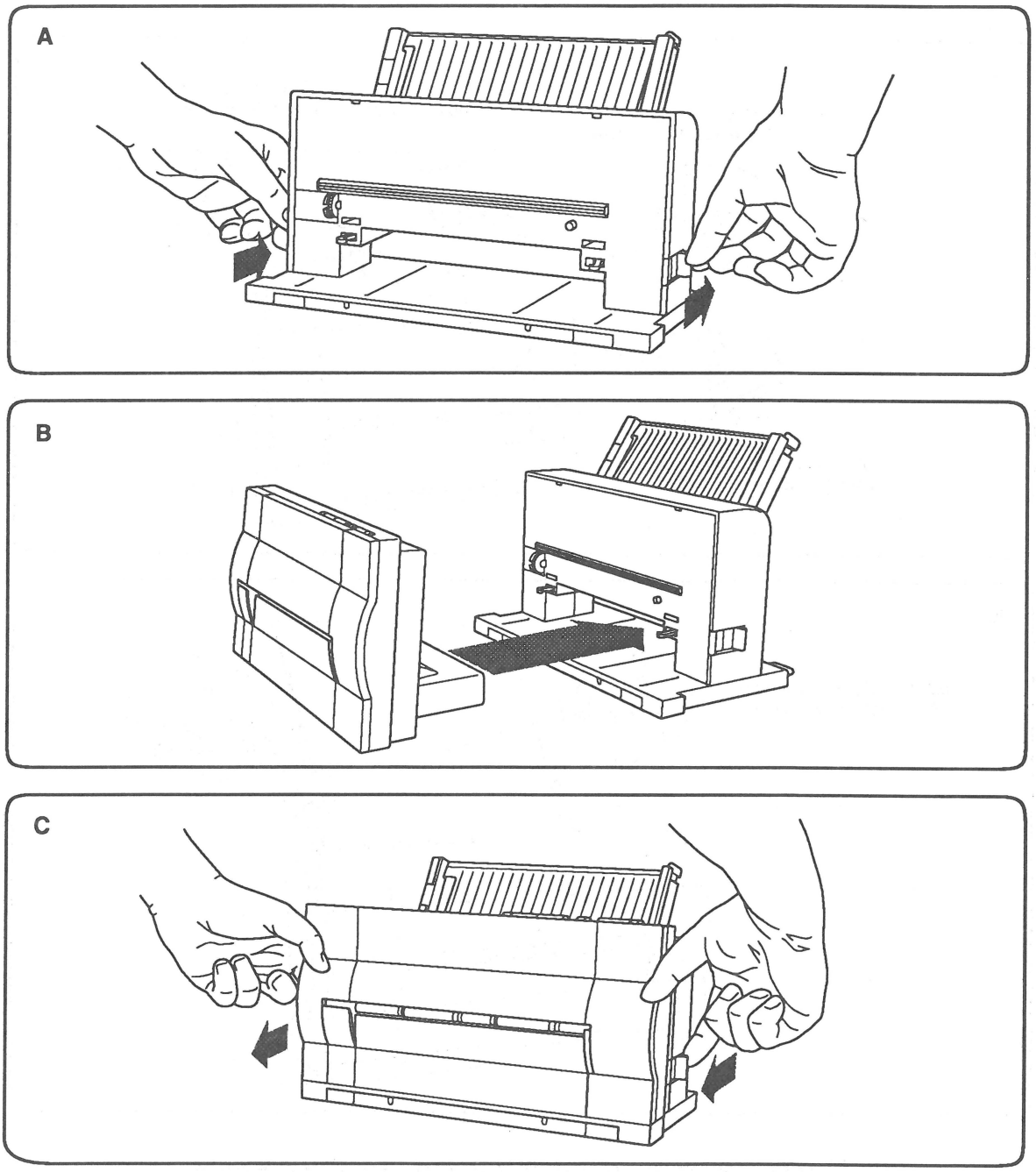


**Figure 1-8 Connecting the Cut Sheet Feeder**

## Loading Paper

To ensure optimum print quality, use 16 lb to 24 lb plain cotton bond, typewriter-quality paper without curls, folds, or damaged edges. Paper thickness should be under 0.2 mm. Paper should be stored at 18°C to 24°C (64°F to 75°F) at 40% to 60% relative humidity.

### *Automatic Feed*

**Figure 1-9** shows how to load paper into the cut sheet feeder.

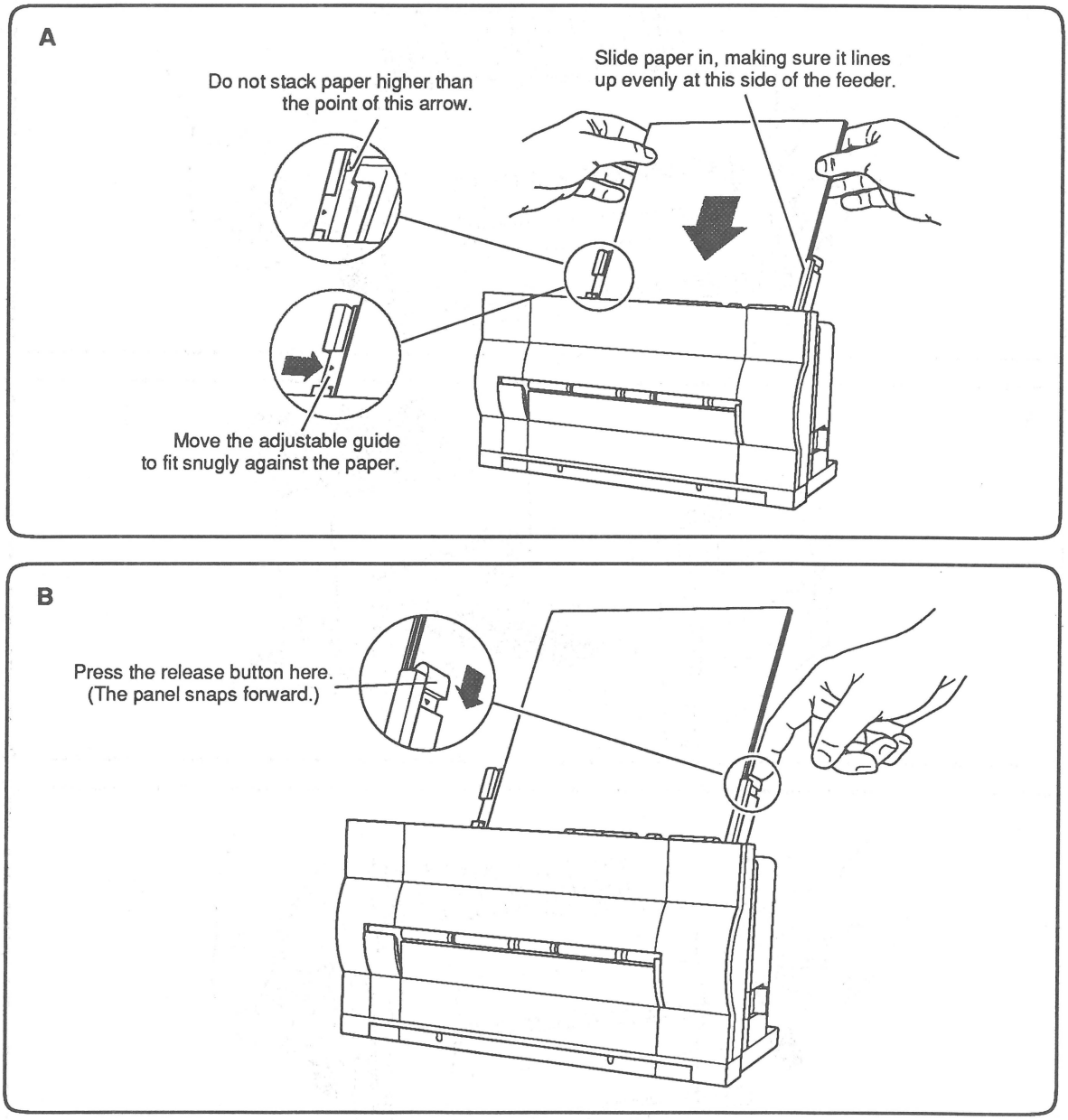


**Figure 1-9 Loading Paper into the Cut Sheet Feeder**

*Manual Feed*
*For Single Sheets*
*(Using Front Slot)*

1. Lower the manual feed tray.
2. In the Page Setup box (under the File menu), identify the size of paper you will be using.
3. Choose Print from the File menu and click **Manual** in the Print dialog box.
4. Press the Ready button to turn off the Ready light.
5. Insert the sheet of paper as far as it will go into the front slot of the printer. **(Figure 1-10)**.
6. Holding the paper positioned in the slot, press and release the Form Feed button. This action feeds the paper around the platen to the first print line.
7. Make sure the paper aligns correctly. If not, pull down the paper release lever, remove the paper from the slot, close the release lever, and repeat steps 5 and 6.
8. Press the Ready button to turn on the Ready light.
9. Click OK in the dialog box on your screen. The printing begins.

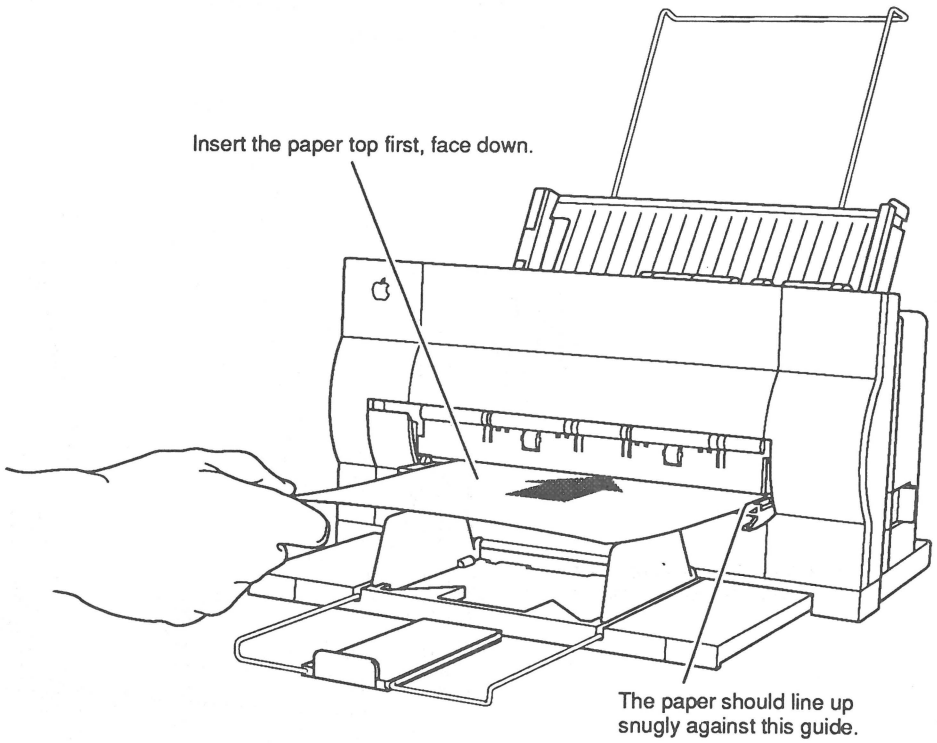


**Figure 1-10 Manual Feed (Front Slot)**

*Manual Feed for Envelopes, etc. (Rear Slot)*

1. Open the front access door and flip the forms thickness lever down. Close the front access door.
2. In the Page Setup box (under the File menu), identify the size of paper or envelope to be used.
3. Choose **Print** from the File menu and click **Manual** in the Print dialog box.
4. Press the Ready button to turn off the Ready light.
5. Insert the envelope, sheet of labels, heavy sheet, or transparency as far as it will go into the rear slot of the cut sheet feeder **(Figure 1-11)**. Insert envelopes top first, address side up. Insert sheets of labels, transparencies, or paper top first and face up. When the material is inserted far enough, the printer grasps the material and draws it in.
6. Make sure the paper aligns correctly. If not, pull down the paper release lever, remove the paper from the slot, close the release lever, and repeat step 5.
7. Press the Ready button to turn on the Ready light.
8. Click OK in the dialog box on your screen. The printing begins.

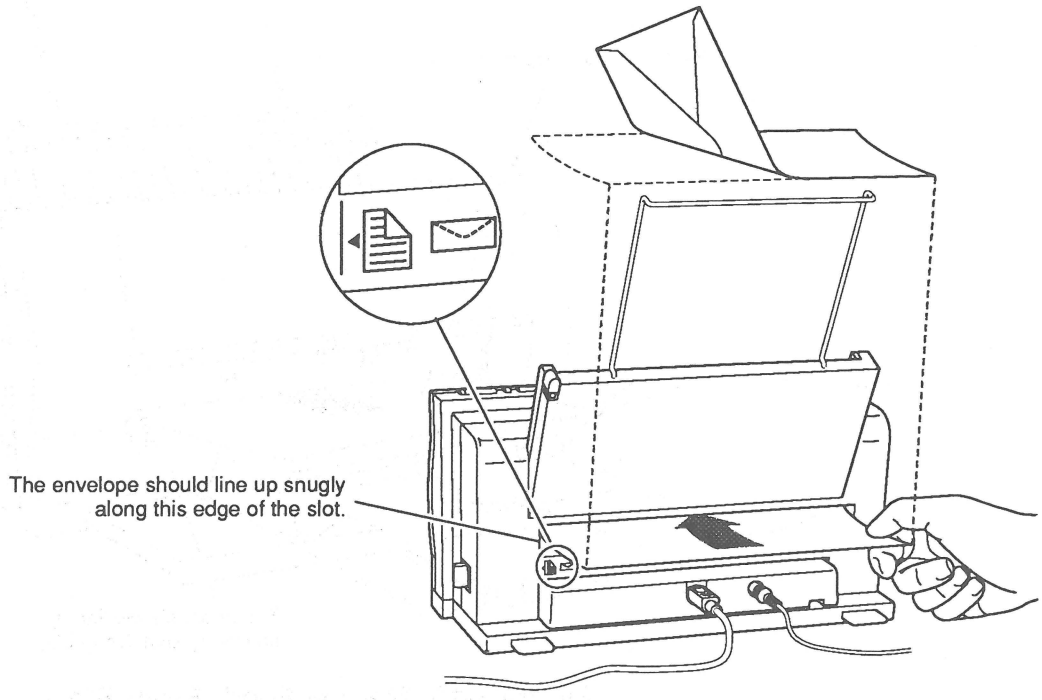


**Figure 1-11 Manual Feed (Rear Slot)**

## ❑ OPERATION PANEL

**Figure 1-12** shows the operation panel, which contains the operating buttons and indicator lights.

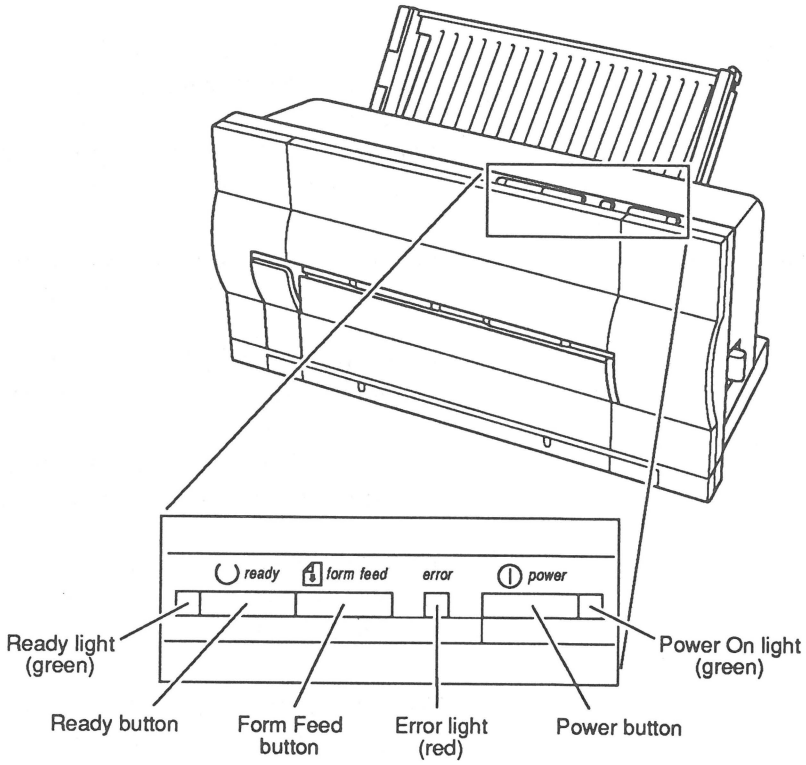


**Figure 1-12 Operation Panel**

### Buttons

The operating buttons enable you to control the printer.

#### Power Button

The Power button switches the printer on and off.

#### Ready Button

The Ready button allows you to toggle between an on-line (ready) state and an off-line state. The Ready button also signals manual-feed printing.

#### Form Feed Button

The Form Feed button does not function unless the printer is in an off-line (deselected) state. When you press the Form Feed button, the printer feeds paper until the printer reaches the top of the next form.

## Indicator Lights

The indicators are lights that let you know what state the printer is in.

### Power

When lit, the green Power light indicates that power is on.

### Ready

When the green Ready light is lit, the printer is on-line, in a ready state so that a transmission can take place. The Ready light is on during warm-up and while printing. If the Ready light is off, the printer is not ready to print.

### Error

The red Error light has three ways of indicating an error condition in the printer:

- If the Error light shines steadily (and the Ready light goes off), the printer is out of paper.
- If the Error and Ready lights blink while the Power light remains steady, paper has jammed.
- If the Error light and Power light both blink (while the Ready light is off), the carriage (containing the ink cartridge) is jammed.

To ensure that the printer is not in an error condition, the printer driver performs a general reset of the printer before beginning each print job.

## ❑ POWER-ON, SELF-TESTS, AND TEST PRINTS

### Power-On

1. Connect one end of the power cord to the printer and the other end to the AC adapter. Connect the AC adapter to the wall outlet.

***CAUTION:*** *The AC adapter supplies 9.5 VDC to the printer. The AC adapter accommodates the voltage used in the geographical region to which the StyleWriter is shipped. Use only the AC adapter supplied with the printer and do not use the printer AC adapter for any other equipment. Be sure to tell customers that the AC adapters for the Macintosh Portable and the StyleWriter fit interchangeably, but their polarities are reversed.* ***The incorrect adapter will blow the input fuse on either device.***

2. Press the Power button.

3. Check the operations panel. Make sure the Power light comes on.

### Logic and Serial Loopback Self-Tests

The printer performs an automatic logic self-test with every power-up; the flashing red Error light on the operations panel indicates an error.

The StyleWriter printer also performs a serial loopback test if you install a serial loopback plug on the serial port and follow the directions for performing the test print (below). If the serial communications are OK, the test print page prints. If not, the red Error light on the operations panel flashes.

### User Test Print

The StyleWriter printer produces a user test print if you do the following:

1. Press and hold the Form Feed button.

2. Press the Power button once, and then release both the Form Feed and the Power button at the same time.

The test print is not really a test—it is simply a visual aid in determining print quality. If the power-up logic test and the serial loopback test (if performed) pass, the test print page will print.

## Print Quality Test Print

A second test print for print quality is available to the servicing technician. This print allows you to diagnose specific problems with the ink jets. To obtain this test print, do the following:

1. Press and hold the Form Feed button and the Ready button.

2. Press the Power button once, and then release the Form Feed, the Ready, and the Power button at the same time.

**Figure 1-13** shows (smaller than actual size) a reproduction of the test quality print. The numbers on the reproduction (which do not appear on the test print) are useful in diagnosing the following:

- Nozzle position – Look for straight columns and an even diagonal line.

- Extraneous dots – Look between the bars for extraneous printing.

- Nozzle position – Look for missing or misplaced dots. Each cluster contains 64 dots (one from each nozzle); the line represents one pass across the paper.

- Nozzle position – Look for straight, parallel columns and even column divergence.

- Optical density – Look for white lines across the bars, which could indicate a clogged or misplaced nozzle.

- Nozzle and print head position – Look for straight, parallel lines and uniformity and squareness in the boxes. Skewness can indicate either print head misalignment or faulty nozzles, depending on the scale of the skew.

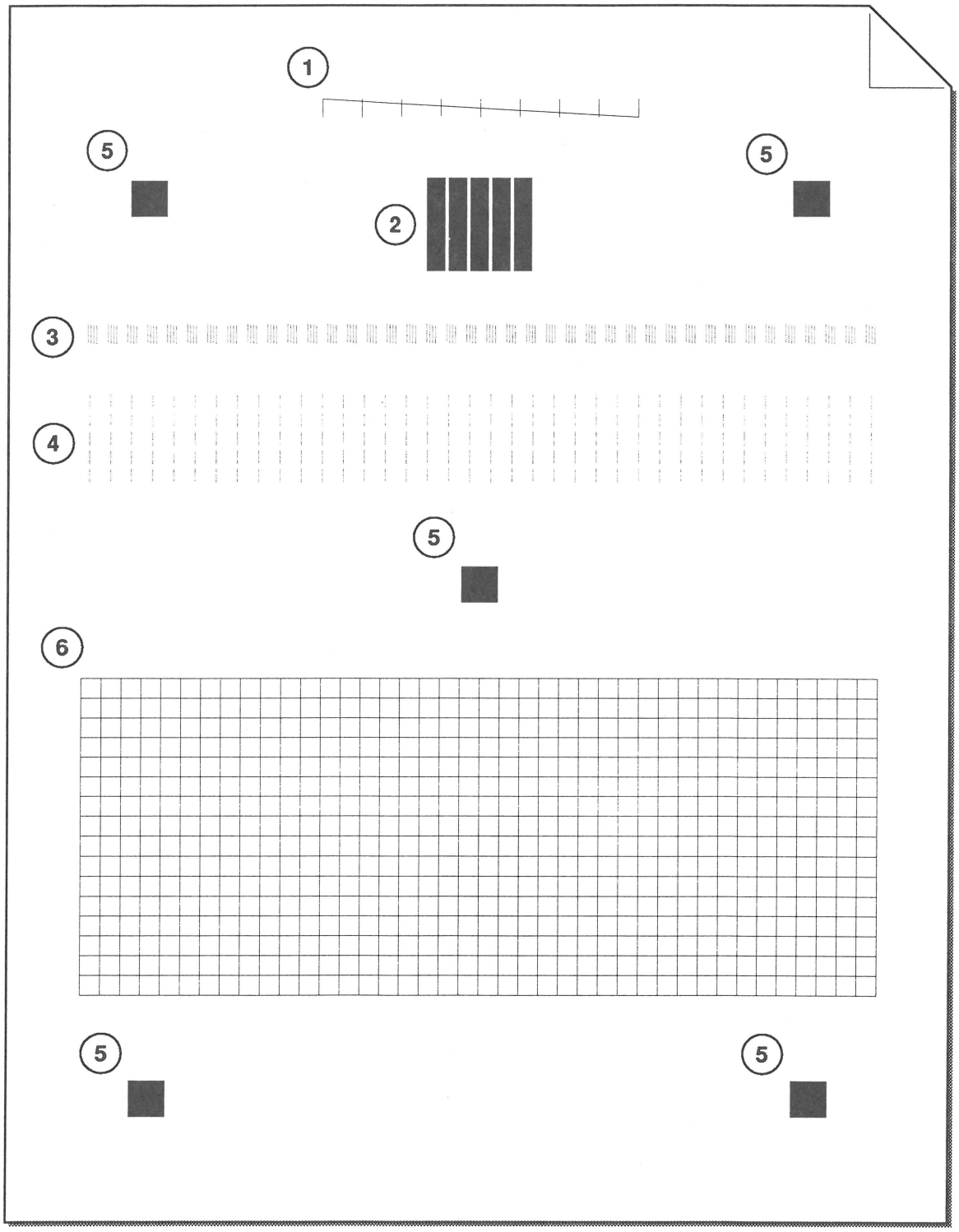


**Figure 1-13 Print Quality Test Print**

Apple Technical Procedures

# StyleWriter

## Section 2 – Take-Apart

## ❑ CONTENTS


2.2 Take-Apart Flowchart
2.3 Introduction
2.3 About This Section
2.3 Materials Required
2.5 Front Access Cover
2.7 Lower Access Cover
2.9 Main Logic Board
2.11 Printer Frame Assembly
2.13 Operation Panel Assembly and Cable
2.15 Cartridge Hook
2.17 Forms Thickness Lever
2.19 Paper Sensor
2.21 Platen Cover and Rollers
2.22 Rear Cover
2.23 Fuse
2.24 Cut Sheet Feeder Output Tray Size Extension
2.25 Cut Sheet Feeder Output Tray Extension Guide and Rod Support
2.26 Cut Sheet Feeder Output Tray and Base


***Note:*** If a step is underlined, detailed instructions for that step can be found elsewhere in this section.

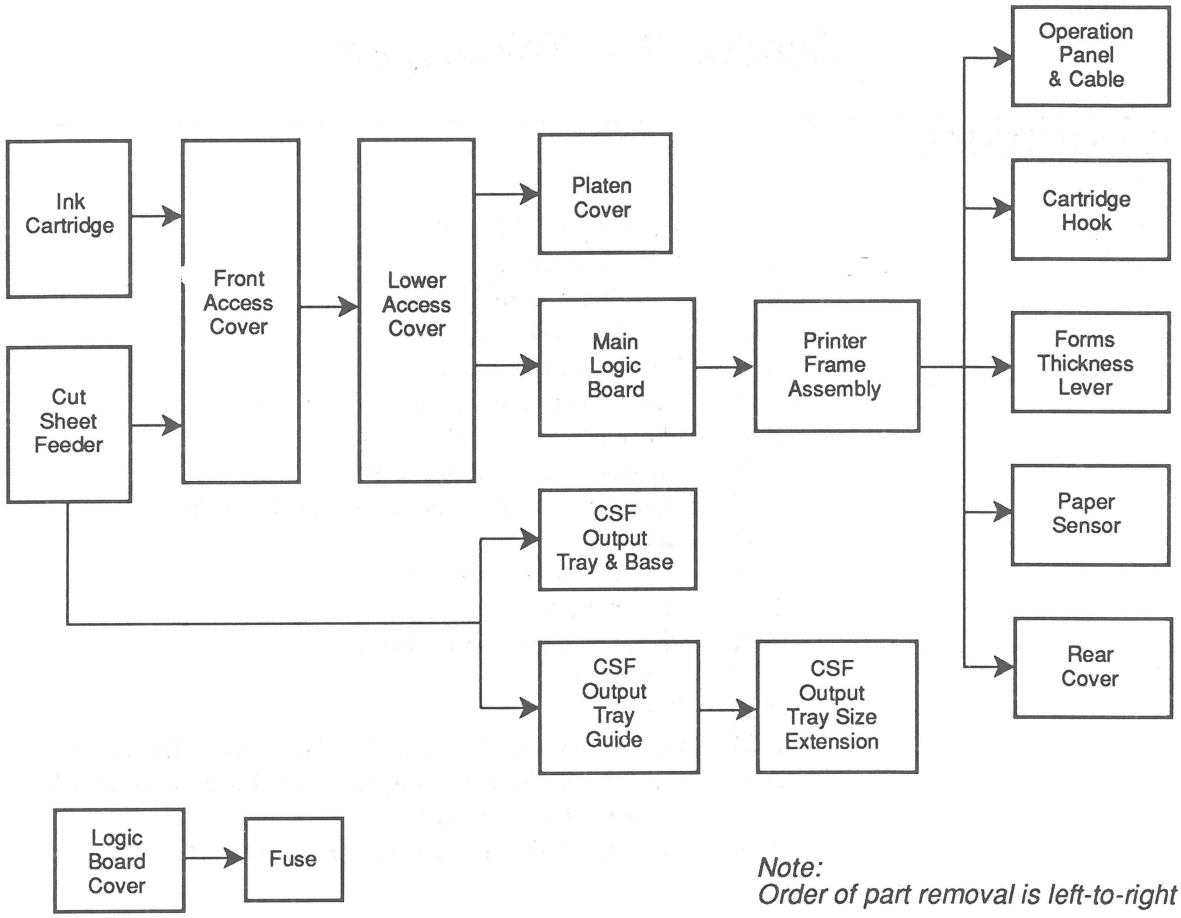


**StyleWriter Take-Apart Flowchart**

# ❑ INTRODUCTION

**About This Section**

The flowchart on the left has a left-to-right, top-to-bottom flow. The chart is designed so that you can see quickly what modules have to be removed before you can work on the module you want.

If a step is underlined in the procedures that follow, detailed instructions for that step can be found in other procedures in the section. You will have to refer to the earlier procedures and remove those modules before you can continue.

The materials required for the entire take-apart are listed below. This list will give you an idea of what tools you need when taking apart the StyleWriter printer.

The graphics are designed to give you maximum assistance. When you look at the graphics, pay attention to details, captions, and arrows.

**Materials Required**

Magnetized #2 Phillips screwdriver
Small, flat-blade screwdriver
Precision (jeweler's) flat-blade screwdriver set
Tweezers (optional)
Grounded workbench pad
Grounding wriststrap

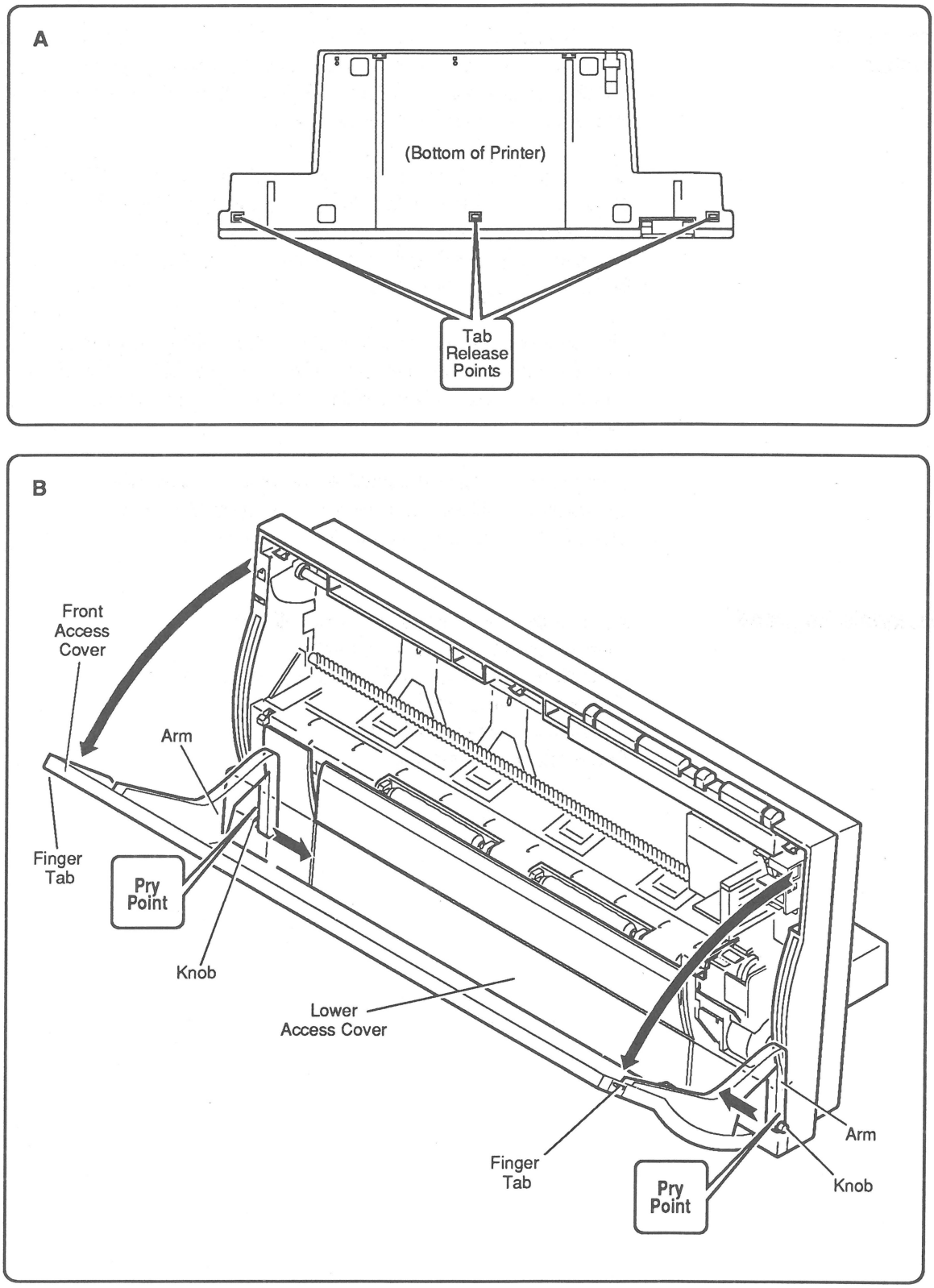


**Figure 2-1 Front Access Cover**

## ❑ FRONT ACCESS COVER

***CAUTION:*** *The StyleWriter printer is built with many plastic parts. Be careful not to bend or break any of the plastic tabs when taking apart the printer. Most of the plastic parts are made of a hard plastic that contains glass fiber, and the viscosity is low to increase the precision of the tooling. As a result, the plastic tabs are easy to break. Use precision screwdrivers or tweezers for take-apart and do not apply excessive force when releasing a tab.*

### Remove

1. Before taking apart the StyleWriter, remove the ink cartridge (if present) and separate the printer from the cut sheet feeder (see Section 1, Basics).

2. Turn the printer so that you can see the bottom. Using a small, flat-blade screwdriver, release the three tabs along the bottom of the rear cover (**Figure 2-1A**). Releasing these tabs will loosen the lower access cover enough for you to remove the upper (front access) cover more easily. (Don't try to remove the lower access cover yet—you will do that in the procedure on the following page.)

3. Open the front access cover by pushing out on the finger tabs at the two upper corners (**Figure 2-1B**). You will see that the front access cover is held in place by two arms that function as hinges. Plastic knobs at the end of the arms fit into holes on the inside of the rear cover. Using a small, flat-blade screwdriver, press the end of each arm in (toward the center of the printer) to free the arm's knob from the hole in the rear cover (**Figure 2-1B**).

4. When both arms are free of the rear cover, lift off the front access cover.

### Replace

1. Be sure the lower access cover is in place, but with the lower tabs loose (as directed in step 2 above).

2. Slide the two front access cover arms down into the rear cover until the knobs snap into their corresponding holes on the rear cover (**Figure 2-1B**).

3. Snap down the lower access cover tabs (**Figure 2-1A**).

4. Replace the customer's ink cartridge.

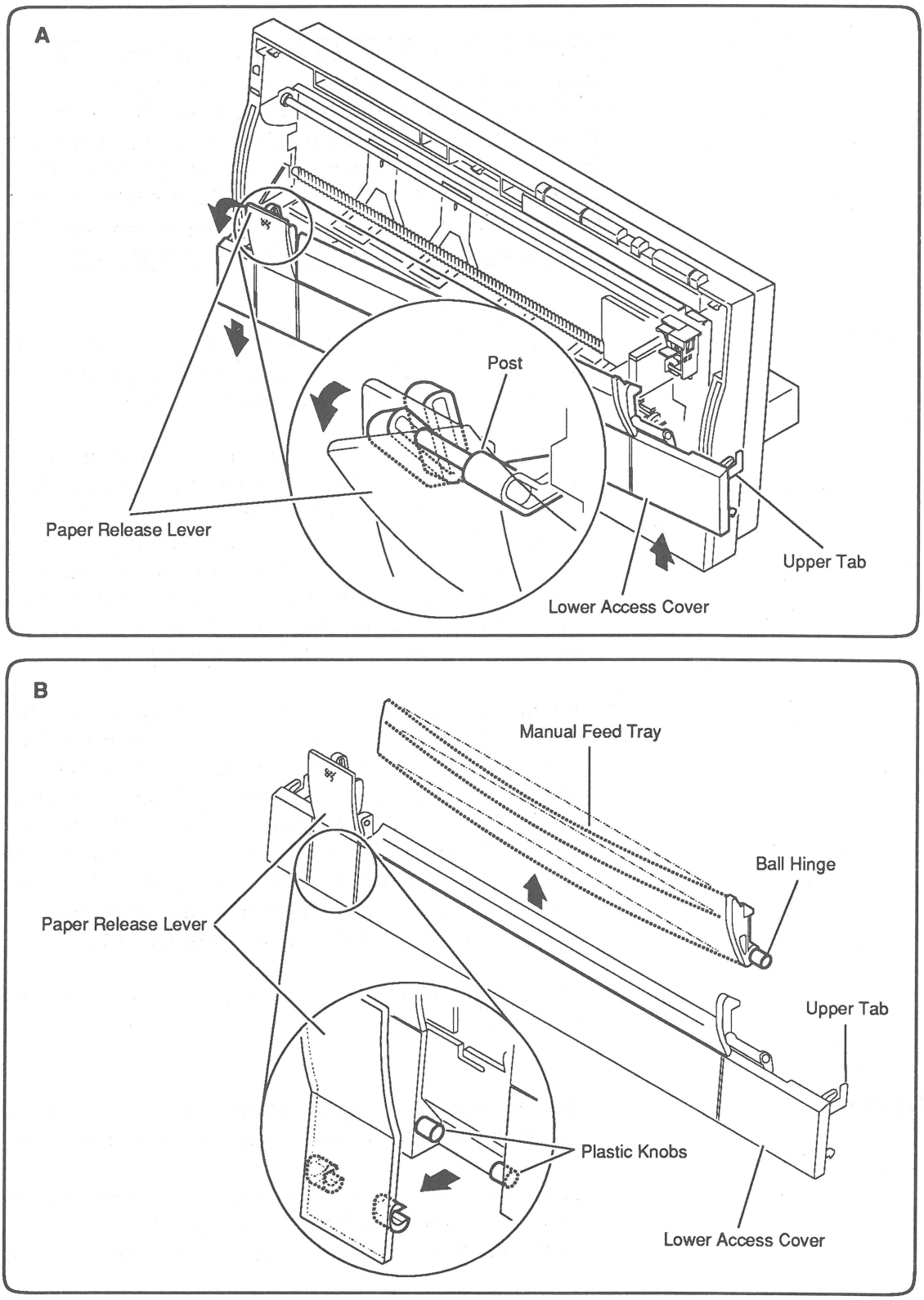


**Figure 2-2 Lower Access Cover**

## ❑ LOWER ACCESS COVER

This procedure includes instructions for replacing the lower access cover, the paper release lever, and the manual feed tray.

### Remove

1. Remove the front access cover.

2. In removing the front access cover, you loosened the three tabs that hold the lower access cover in place on the bottom of the printer. Now maneuver the lower access cover free at the upper tabs (**Figure 2-2A**).

3. The lower access cover is now free except at the paper release lever. Pull the paper release lever down as far as it will go. Angle the paper release lever so that you can slip it off the paper release post on the frame (**Figure 2-2A**).

4. If you need to remove the paper release lever from the lower access cover, rotate the lever away from the cover until the lever's plastic hinges can be freed from the holders on the lower access cover. (**Figure 2-2B**).

5. If you need to remove the manual feed tray, simply flex it enough to free its plastic hinges from the lower access cover (**Figure 2-2B**).

### Replace

1. If you removed the paper release lever and/or the manual feed tray, replace them by slipping their plastic ball hinges into place on the lower access cover (**Figure 2-2B**).

2. Angle the paper release lever (now attached to the lower access cover) over the post on the frame (**Figure 2-2A**).

3. Snap the upper tabs of the lower access cover into the frame (leave the lower tabs loose to make replacement of the front access cover easier).

4. Close the paper release lever (**Figure 2-2A**).

5. Replace the front access cover (in that procedure you are instructed to snap down the bottom tabs of the lower access cover).

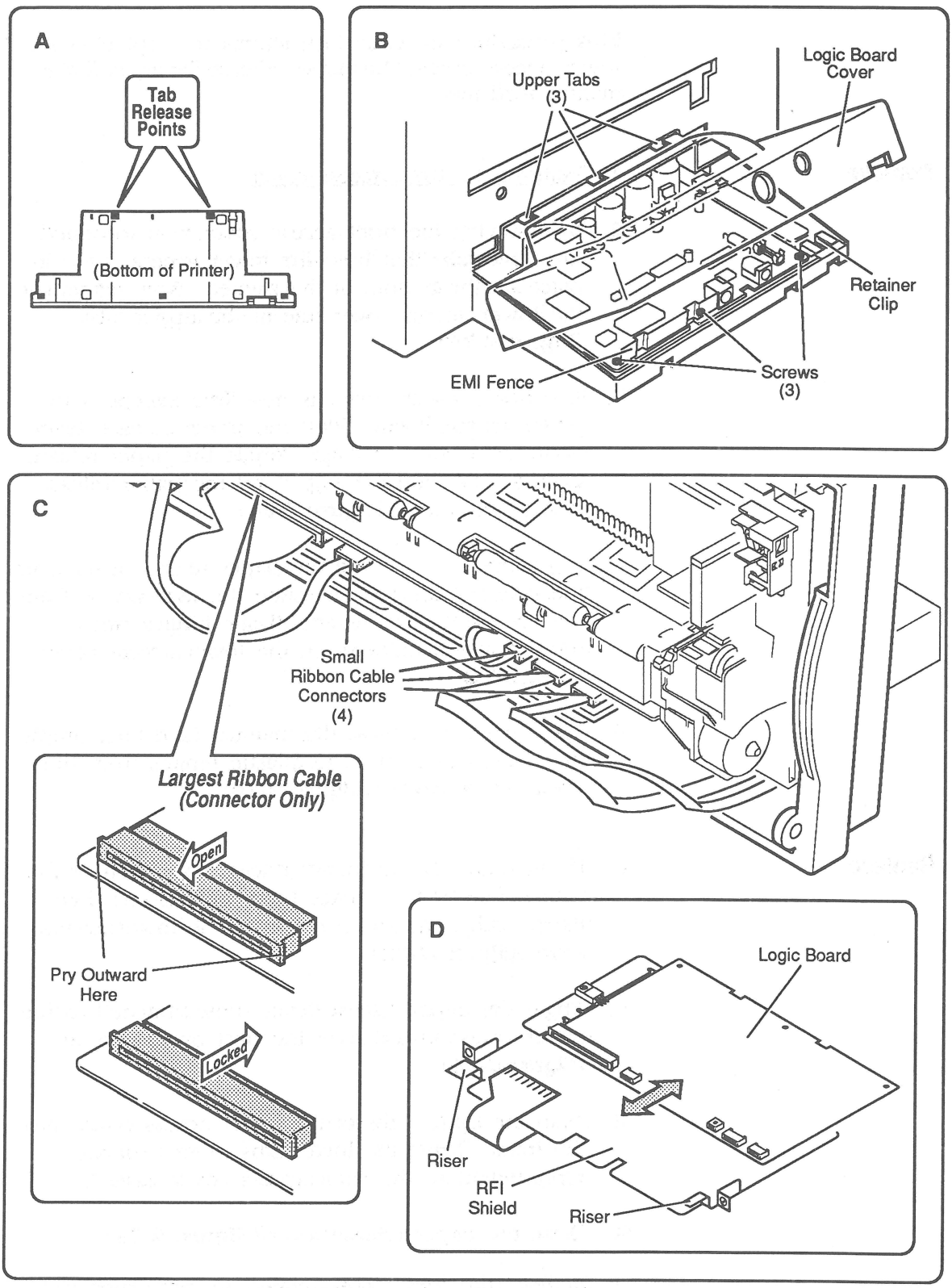


**Figure 2-3 Main Logic Board**

## ❑ MAIN LOGIC BOARD

### Remove

1. Remove the front access cover and lower access cover.

2. Turn the printer so that you can see the bottom. Release the two lower tabs that secure the logic board cover to the printer bottom (**Figure 2-3A**).

3. Lift the rear of the logic board cover and free the cover at its upper tabs (**Figure 2-3B**).

***CAUTION:*** *In the following steps you will disconnect five fragile ribbon cables.* ***Handle these cables with great care and do not disconnect them except when necessary.***

4. Turn the printer so that you can see the printer frame assembly. Disconnect the four smaller ribbon cables from the logic board by pulling gently on the tab ends (**Figure 2-3C**).

5. To disconnect the largest connector, slide the front half of the connector toward you to unlock the connector. Gently pull out the cable (**Figure 2-3C**).

6. Turn the printer so that you can see the logic board. Remove the three screws at the rear of the logic board (**Figure 2-3B**), set aside the EMI fence, and slide the logic board out of the frame from the rear. Be sure not to lose the retainer clip.

### Replace

1. Slide the logic board into place from the rear of the printer. Be sure the front edge of the logic board rests on top of the risers at the front edge of the metal RFI shield (**Figure 2-3D**).

2. Align the screw holes on the rear of the logic board with the screw holes on the RFI shield and on the bottom cover. Place the two holes of the EMI fence over the two left holes of the logic board, as shown in **Figure 2-3B.** Replace the three screws.

3. Turn the printer so you can see the printer frame assembly. Open the largest ribbon cable connector by sliding the front half of the connector toward you. Insert the ribbon cable into the connector so that the cable's metal contact points are pointing up. To lock the cable in place, push the front half of the connector back (**Figure 2-3C**).

4. Tuck the fold of the large ribbon cable under the RFI shield (**Figure 2-3D**).

5. Insert the four remaining ribbon cables into their connectors on the logic board (**Figure 2-3B**). Be sure the metal contact points are visible on the upper side and that the paper tabs are facing down.

6. Turn the printer so you can see the logic board. Check to be sure the retainer clip is in place.

7. To replace the logic board cover, insert the top three tabs into their holes on the back of the rear cover (**Figure 2-3B**). Push down on the logic board cover until the bottom tabs snap into place.

8. Replace the lower access cover and front access cover.

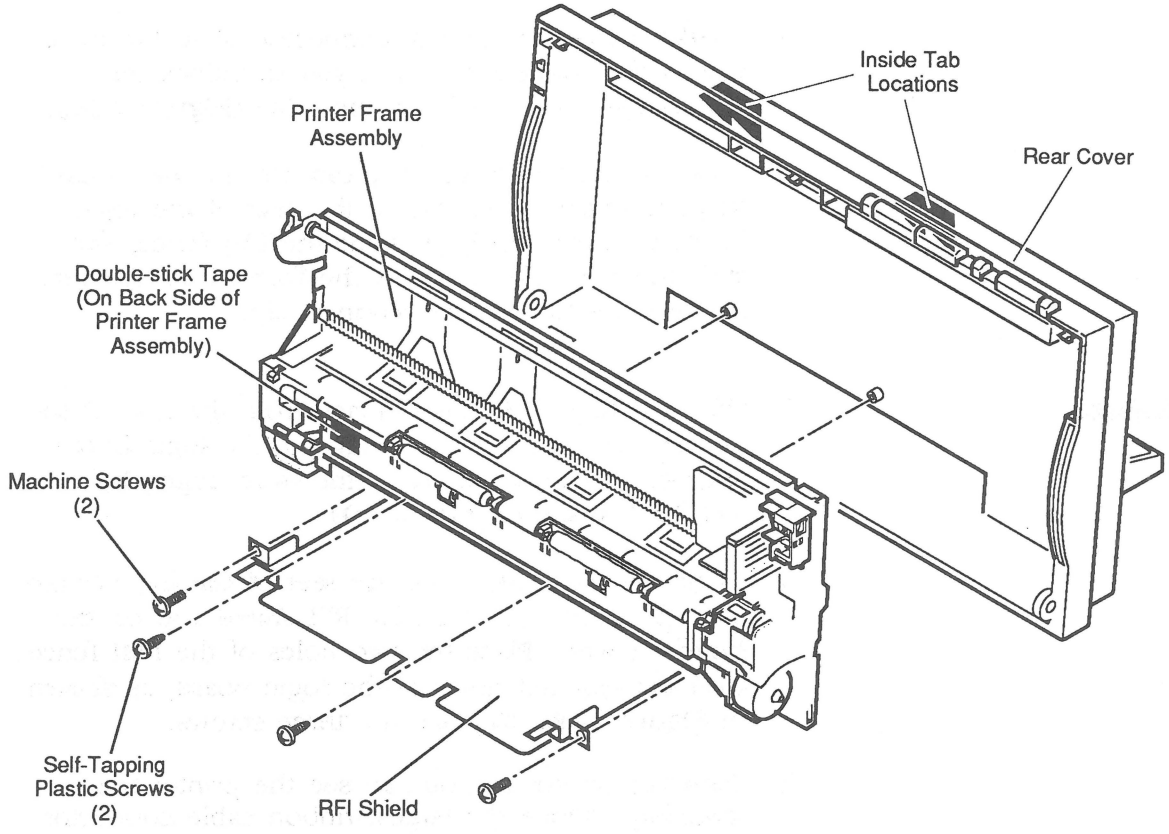


**Figure 2-4 Printer Frame Assembly**

## ❑ PRINTER FRAME ASSEMBLY

### Remove

1. Remove the front access cover, lower access cover, and main logic board.

2. Remove the four screws that secure the printer frame assembly to the rear cover (**Figure 2-4**).

3. Slide the RFI shield from the front of the printer. Take care that the retainer (security) clip at the rear corner of the bottom cover does not fall out when you remove the RFI shield (for location of the retainer clip, see **Figure 2-3B** on the previous page).

4. Lift the printer frame assembly down and out to free it from the tabs on the upper inside of the rear cover (**Figure 2-4**).

***IMPORTANT:*** *The printer frame assembly comes with the platen cover, paper sensor, cartridge hook, and forms thickness lever installed, so do not remove these parts prior to returning a printer frame to Apple.*

### Replace

***Note:*** For safer shipping, ribbon cables on replacement printer frame assemblies are taped to the assembly. Remove the tape carefully. Pay close attention to tape over ribbon cable ends. This tape can peel the mylar backing and make the ribbon cable difficult to insert into the connector. After removing tape from the cartridge ribbon cable, press the cable onto the double-stick tape in the bottom-left corner of the assembly (**Figure 2-4**).

1. Slide the printer frame assembly up into the rear cover so that the metal top of the frame fits behind the plastic tabs on the top inside of the cover (**Figure 2-4**). Make certain that the connector ends of the operations panel cable and paper sensor cable are visible and hanging freely below the assembly.

2. Slide the RFI shield into place from the front of the printer (**Figure 2-4**). Route the large ribbon cable under the RFI shield and out the front.

3. Be sure the printer frame assembly sits securely in place and that the screw holes on the printer frame assembly align with the two screw holes on the RFI shield and the two screw holes on the rear cover. Replace the four screws (**Figure 2-4**).

4. Replace the main logic board, lower access cover, and front access cover.

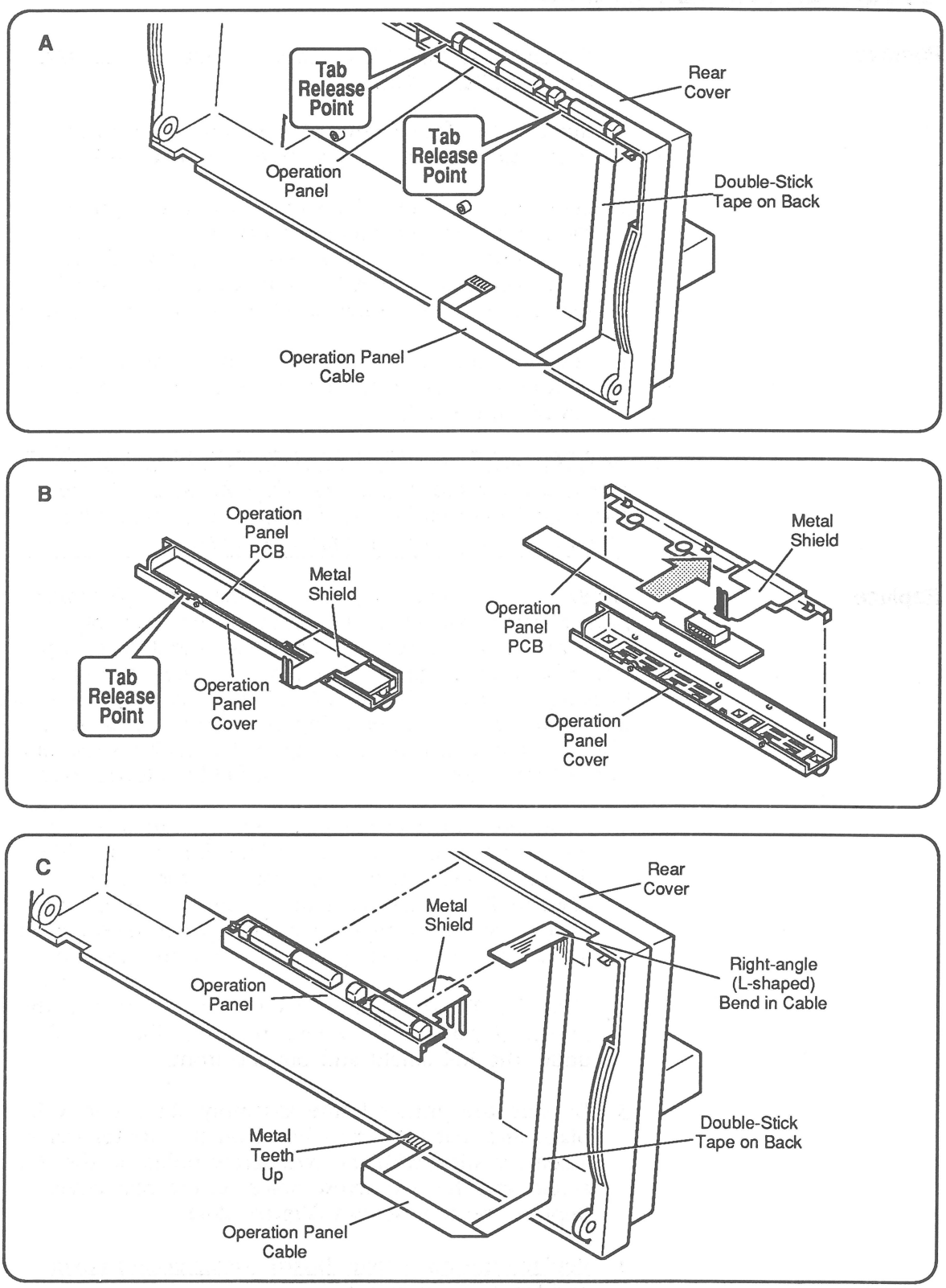


**Figure 2-5 Operation Panel Assembly and Cable**

## ❑ OPERATION PANEL ASSEMBLY AND CABLE

The operation panel assembly includes the panel cover (with buttons) and the PCB. The metal shield and the operation panel cable are available separately.

### Remove

1. Remove the front access cover, lower access cover, main logic board, and printer frame assembly.
2. Pull up carefully on the ribbon cable, which is fastened to the inside of the printer rear cover with double-stick tape (**Figure 2-5A**).
3. Using a precision screwdriver (and being careful not to mar the plastics), release the two tabs that hold the operation panel assembly to the printer rear cover (**Figure 2-5A**). Slide the operations panel toward you to free it from the printer rear cover.
4. To remove the operations panel cable, pull gently on the cable connector to free it from its connector.
5. To remove the metal shield, turn the assembly over so that you can see the PCB on the bottom (**Figure 2-5B**). Release the tabs that hold the PCB to the cover and lift out the PCB and the metal shield.

### Replace

1. Replace the metal shield in the operations panel assembly cover as shown in **Figure 2-5B**. Then slide the PCB into place on the bottom of the cover and press down until you hear the tabs snap into place.
2. To replace the operation panel cable, determine which end of the cable has a right-angle (L-shaped) bend about 1 inch from the connector—connect that end to the connector on the panel (the L-shaped bend fits into the top inside of the printer rear cover as shown in **Figure 2-5C**). Be sure that the metal teeth of the connector face the bottom side of the connector and that the colored plastic faces up.
3. Remove the protective strip from the double-stick tape. Press on the cable to adhere the double-stick tape to the rear cover. Be sure the cable has sufficient "play" at the right-angle (L-shaped) fold so that the printer frame does not put stress on the cable when the frame is reinstalled (**Figure 2-5C**).
4. Replace the printer frame assembly, lower access cover, and front access cover.

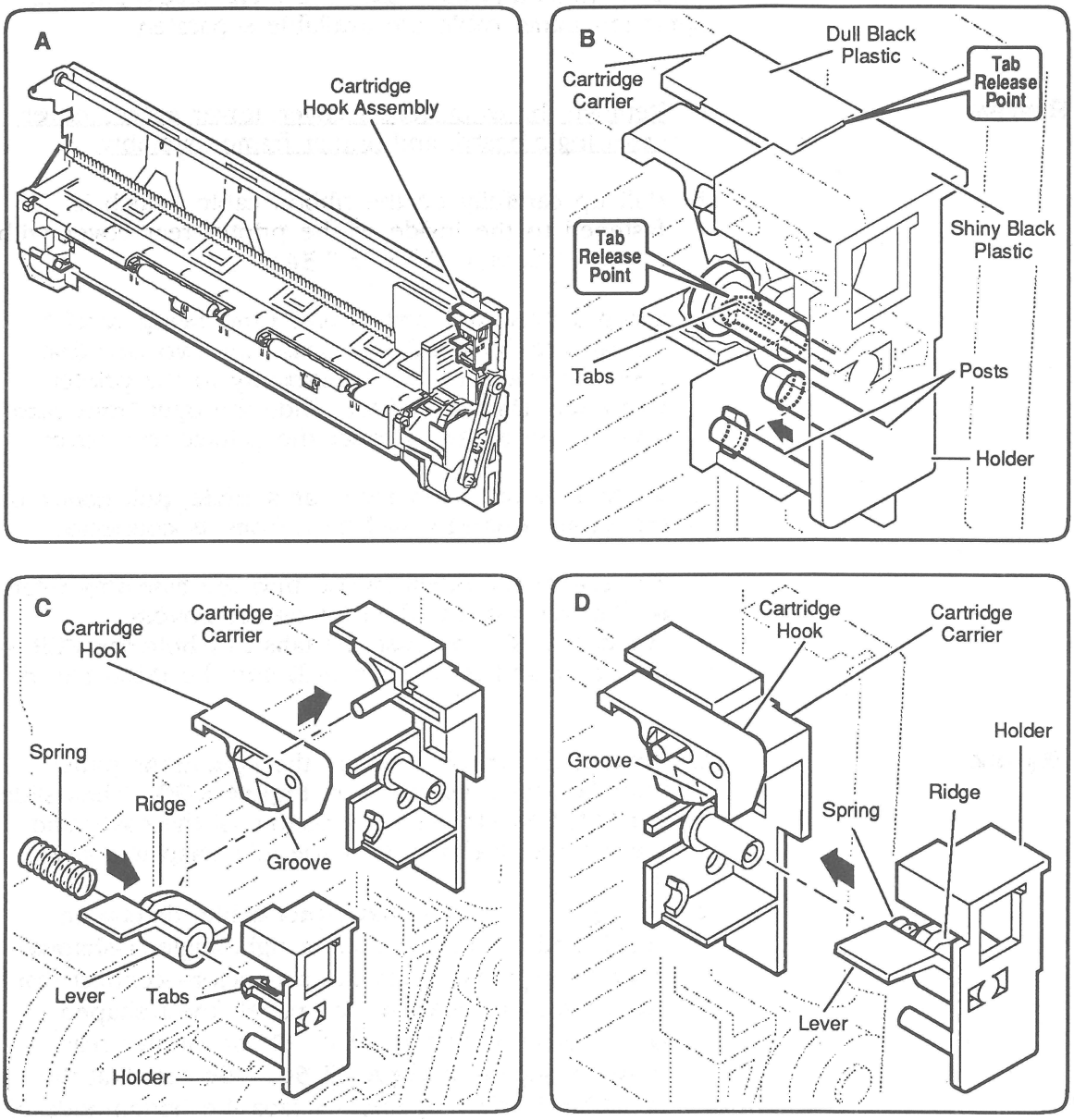


**Figure 2-6 Cartridge Hook**

## ❑ CARTRIDGE HOOK

The cartridge hook assembly kit contains the cartridge hook, lever, spring, and holder.

### Remove

1. Remove the front access cover, lower access cover, main logic board, and printer frame assembly.

2. Place the printer frame assembly on a padded surface (take care not to crumple the ribbon cables under the frame).

3. Look carefully at the cartridge hook assembly in the upper-right corner of the printer frame assembly (**Figure 2-6A**). Note how the lever and the cartridge hook are positioned in the assembly. Move the lever up and down and watch the cartridge hook operate. Also note that the plastic of the cartridge hook holder is glossy black; the plastic of the adjacent carrier is a dull black (**Figure 2-6B**).

4. Using a precision screwdriver, gently pry between the top of the cartridge hook holder and the adjacent plastic of the cartridge carrier at tab release point **#1** (**Figure 2-6B**). Push the cartridge hook holder toward the right edge of the printer frame. Insert small tweezers into the cartridge carrier post at tab release point **#2** and gently squeeze the tips of the lower tabs inward to release the tabs from the inside of the post.

5. When the cartridge hook holder is loose, pull it off the frame. The four pieces of the cartridge hook assembly (the holder, spring, lever, and hook) will fall into your hand.

### Replace

1. Assemble the cartridge hook assembly pieces as shown in **Figure 2-6C**: put the cartridge hook on its post on the cartridge carrier and put the lever and the spring over the central post of the holder.

2. Slide the cartridge hook assembly into place on the cartridge carrier as you mesh the ridge on the lever with the groove on the bottom of the cartridge hook (**Figure 2-6D**). Be sure the assembly snaps securely into place on the carrier.

3. Replace the printer frame assembly, main logic board, lower access cover, and front access cover.

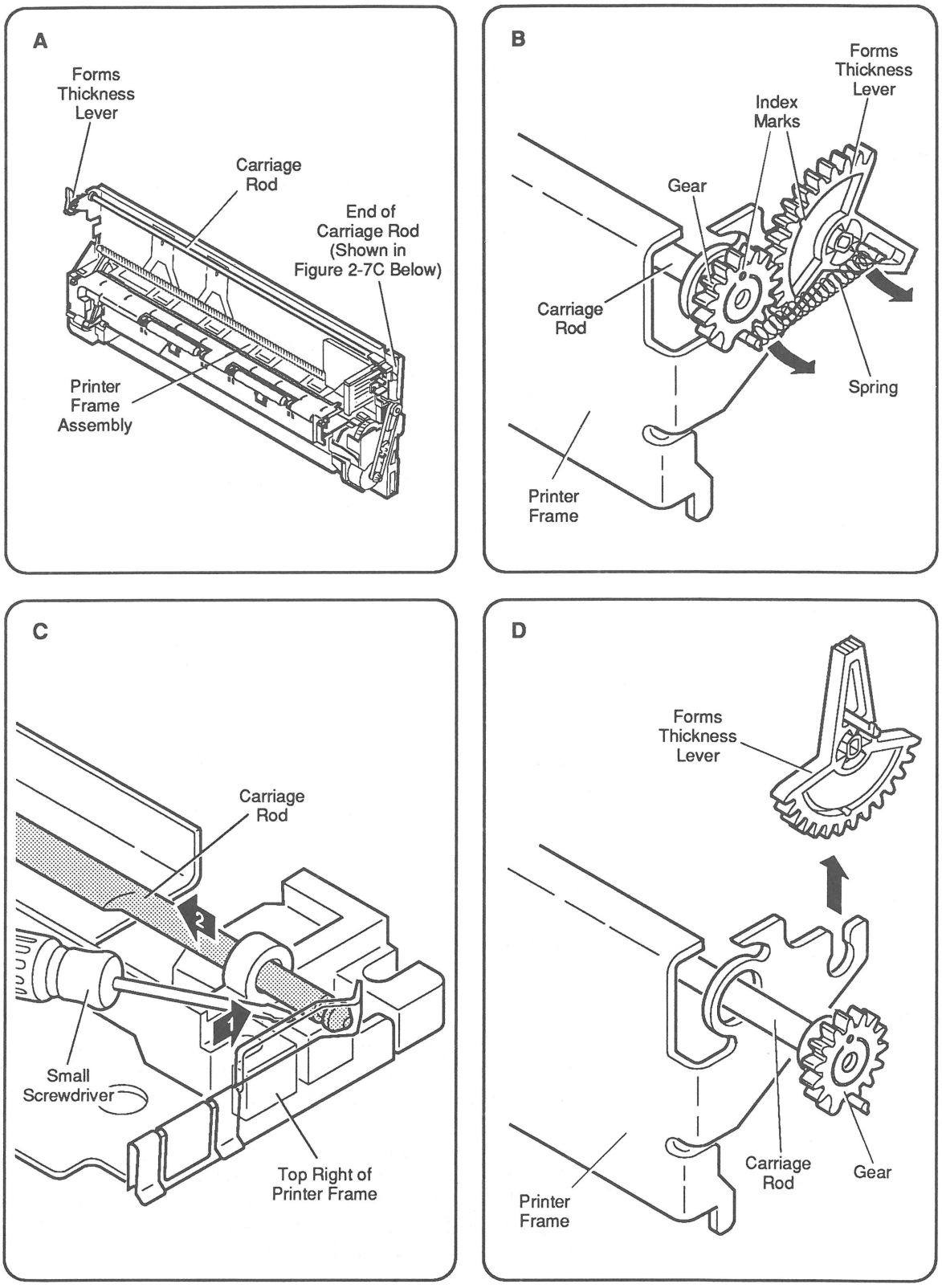


**Figure 2-7 Forms Thickness Lever**

## ❑ FORMS THICKNESS LEVER

The forms thickness lever kit contains the forms thickness lever and its spring.

### Remove

1. Remove the front access cover, lower access cover, main logic board, and printer frame assembly.

2. Place the printer frame assembly on a padded surface, taking care not to crumple the ribbon cables under the frame.

3. Locate the forms thickness lever in the upper-left corner of the printer frame assembly (**Figure 2-7A**).

4. Remove the spring from the forms thickness lever (**Figure 2-7B**).

5. The forms thickness lever is actually a gear that meshes with a second gear to the rear; the second gear attaches to the carriage shaft that controls the distance of the ink cartridge from the paper. Observe how the two gears fit together. Note the gear index markings (dots) that align when the gears are in the middle of the range (**Figure 2-7B**). You will need to know how these markings line up so you can reassemble the gears correctly.

6. Now look at the other end of the carriage shaft (at the upper-right corner of the printer frame). The notch at the end of the shaft is secured in a tiny black plastic holder (**Figure 2-7C**). In this step, you are going to free the end of the shaft from the holder and push the shaft toward the other end of the printer frame assembly (toward the forms thickness lever) so that the gear attached to the shaft pushes past and separates from the forms thickness lever gear. To do this, use a precision screwdriver to push down on the black plastic holder while you push the shaft to the left (toward the forms thickness lever).

7. Now that the forms thickness lever is free of the rear lever, you can turn the forms thickness lever gear to its full UP or full DOWN position and slide it off the printer frame (**Figure 2-7D**).

**Replace**

1. Position the forms thickness lever in the full UP or full DOWN position and slide it onto the printer frame (**Figure 2-7D**).

2. Position the rear gear beside the forms thickness lever gear so that the index markings on the two gears line up (**Figure 2-7B**). Push the rear gear and the carriage shaft toward the right side of the printer frame so that the other end of the carriage shaft snaps into place in its black plastic holder (**Figure 2-7C**). Rotate the forms thickness lever up and down to be sure the gears are synchronized and work freely together.

3. Replace the spring (**Figure 2-7B**).

4. Replace the printer frame assembly, main logic board, lower access cover, front access cover.

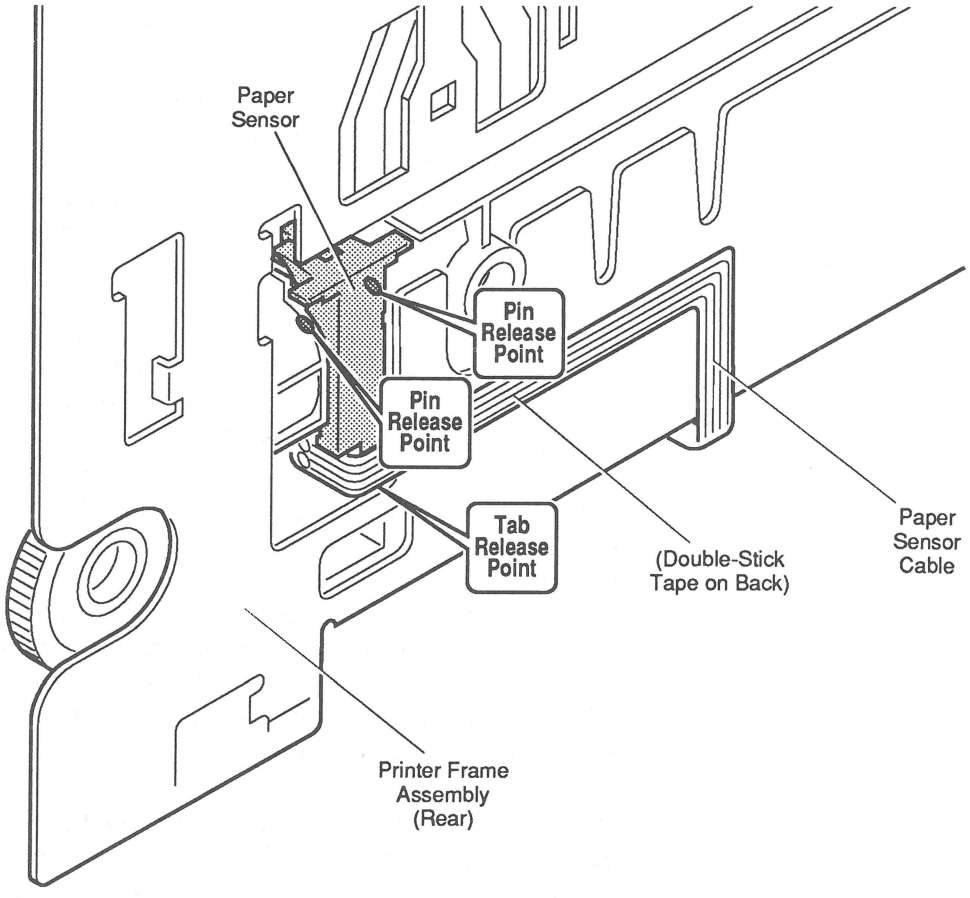


**Figure 2-8 Paper Sensor**

## ❑ PAPER SENSOR

The paper sensor is located on the rear of the printer frame assembly. The paper sensor cable attaches to the front of the logic board.

### Remove

1. Remove the front access cover, lower access cover, main logic board, and printer frame assembly.

2. Turn the printer frame assembly over and locate the paper sensor (**Figure 2-8**). Note that the paper sensor cable is attached to the back of the printer frame with double-stick tape. Carefully peel the cable off the tape, but leave the tape in place on the metal frame.

3. Using a precision screwdriver, carefully release the tab at the bottom of the paper sensor. To loosen the pins that hold the top of the paper sensor in place, carefully insert your precision screwdriver between the paper sensor and the frame at the upper pin release points (**Figure 2-8**). When the paper sensor is free of the frame, lift the sensor out.

### Replace

1. Snap the paper sensor into place on the rear of the printer frame assembly (**Figure 2-8**).

2. Route the paper sensor cable over the double-stick tape and press the cable down to secure it firmly to the tape.

3. Replace the printer frame assembly, main logic board, lower access cover, and front access cover.

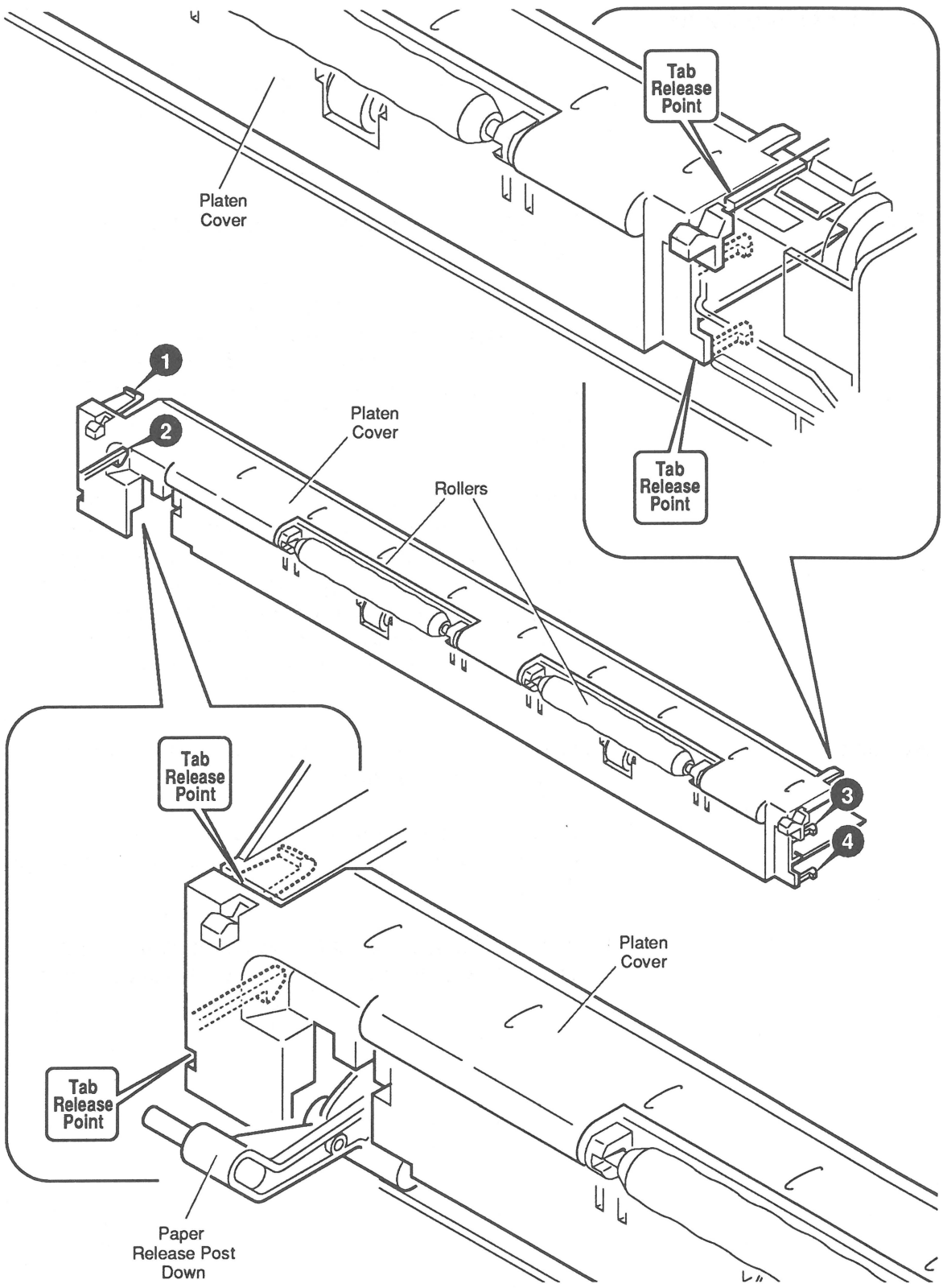


**Figure 2-9 Platen Cover and Rollers**

## ❑ PLATEN COVER AND ROLLERS

***CAUTION: Removal of the platen cover is necessary only if it is broken and must be replaced—do not remove it in order to perform other take-apart procedures.*** *Removal of the platen cover is the most painstaking procedure in this section. The plastic tabs are hidden and tiny, and they break very easily.* ***Be very careful not to use force!***

### Remove

1. Remove the front access and lower access covers.
2. Pull the paper release post down as far as possible.
3. Before going on, examine **Figure 2-9** to familiarize yourself with the placement of the four tabs (**#1**, **#2**, **#3**, and **#4**) that hold the platen cover in place, and the location of the tab release points on the printer frame (shown in the upper and lower closeups). Only the lower right tab (**#4**) is visible from the outside when the platen cover is in place.
4. Using a precision (jeweler's) screwdriver, **carefully** free the upper-left tab (**#1**) at the tab release point indicated in the lower figure closeup (**Figure 2-9**).
5. Place your screwdriver between the platen cover and the printer frame at the release point for the lower left tab (**#2**) and pry **gently** to free the tab.
6. Now lift up and rotate the cover slightly to free the upper and lower right tabs (**#3** and **#4**)—at the other end of the platen cover—from the printer frame. Lift the platen cover free.

### Replace

1. Be sure the paper release post is down.
2. Carefully move the platen cover into position over the platen and push down gently on the platen cover until the tabs snap into place.
3. Replace the lower access cover and front access cover.

### Rollers

You need not remove the platen cover from the frame in order to replace a roller. Simply grasp the roller with your fingers and pull—its end tabs will slip out of the holes on the platen cover. To replace a roller, simply snap it into place on the platen cover.

## ❑ REAR COVER

**Remove**

1. Remove the front access cover, lower access cover, main logic board, printer frame assembly, and operations panel assembly and cable.

2. Remove the retainer (security) clip from the rear corner of the rear cover (**Figure 2-10A**). Save the retainer clip to install on the replacement rear panel.

**Replace**

1. Read the customer's original serial number from the label on the bottom of the old rear cover and record the number with indelible ink on the bottom of the new cover (**Figure 2-10B**).

2. Replace the customer's retainer (security) clip on the rear corner of the rear cover (**Figure 2-10A**).

3. Replace the operations panel assembly and cable, printer frame assembly, main logic board, lower access cover, and front access cover.

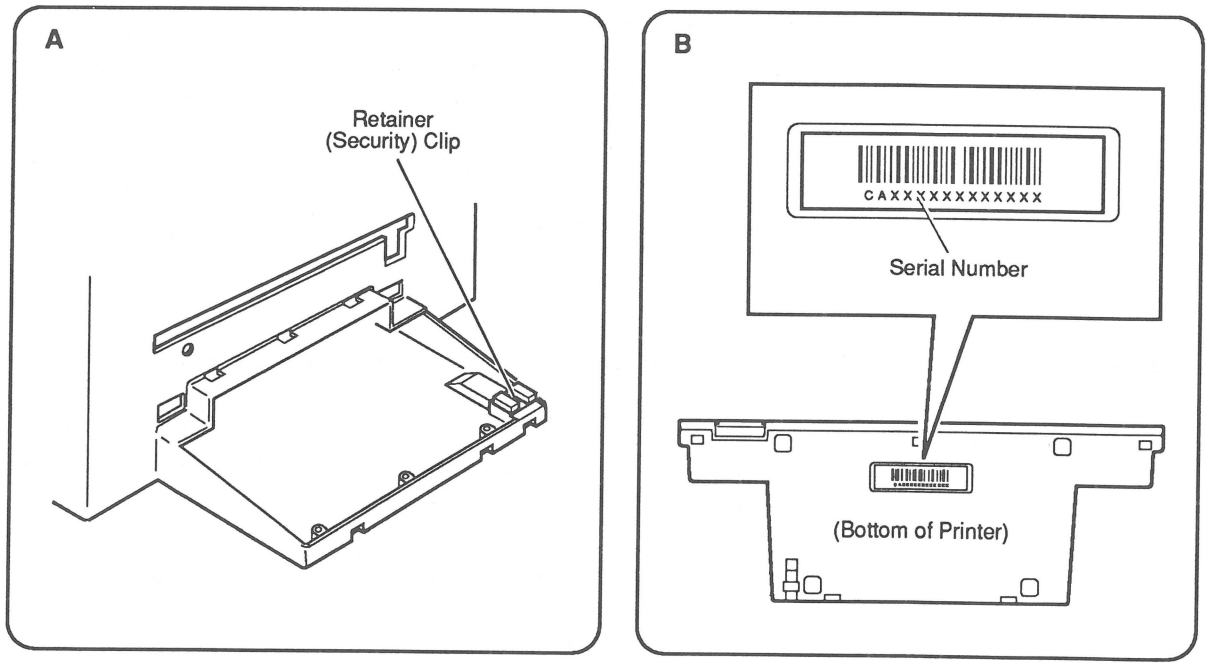


**Figure 2-10 Rear Cover**

## ❑ FUSE

**Remove and Replace**

1. Remove the main logic board cover.

2. Locate the fuse (**Figure 2-11**). Using a precision screwdriver, gently pry the ends of the fuse out of the holder.

3. Carefully snap the replacement fuse into the holder.

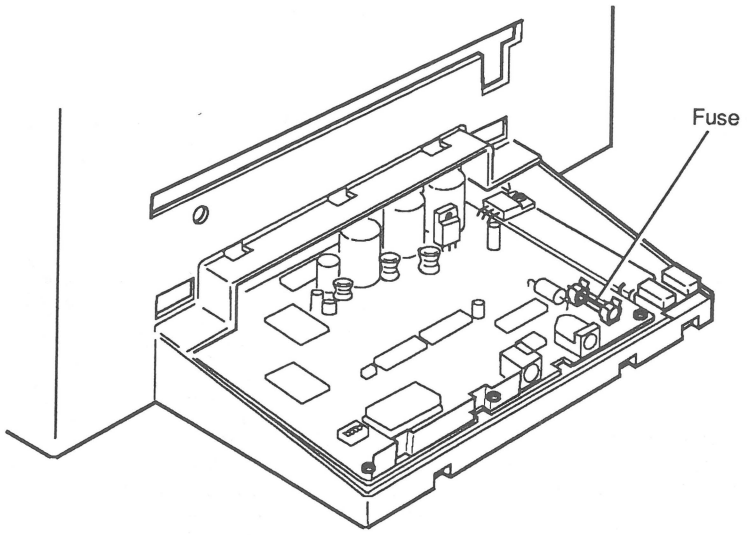


**Figure 2-11 Fuse**

## ❑ CUT SHEET FEEDER OUTPUT TRAY SIZE EXTENSION

**Remove**

1. Separate the cut sheet feeder from the printer (see Section 1, Basics).
2. Open the output tray on the cut sheet feeder and tip up the extension so that you can see the underside (**Figure 2-12**).
3. Using a precision screwdriver, lift up the tabs on the extension guide and slide the size extension out.

**Replace**

– Slide the new size extension into the extension guide until the tabs snap into place.

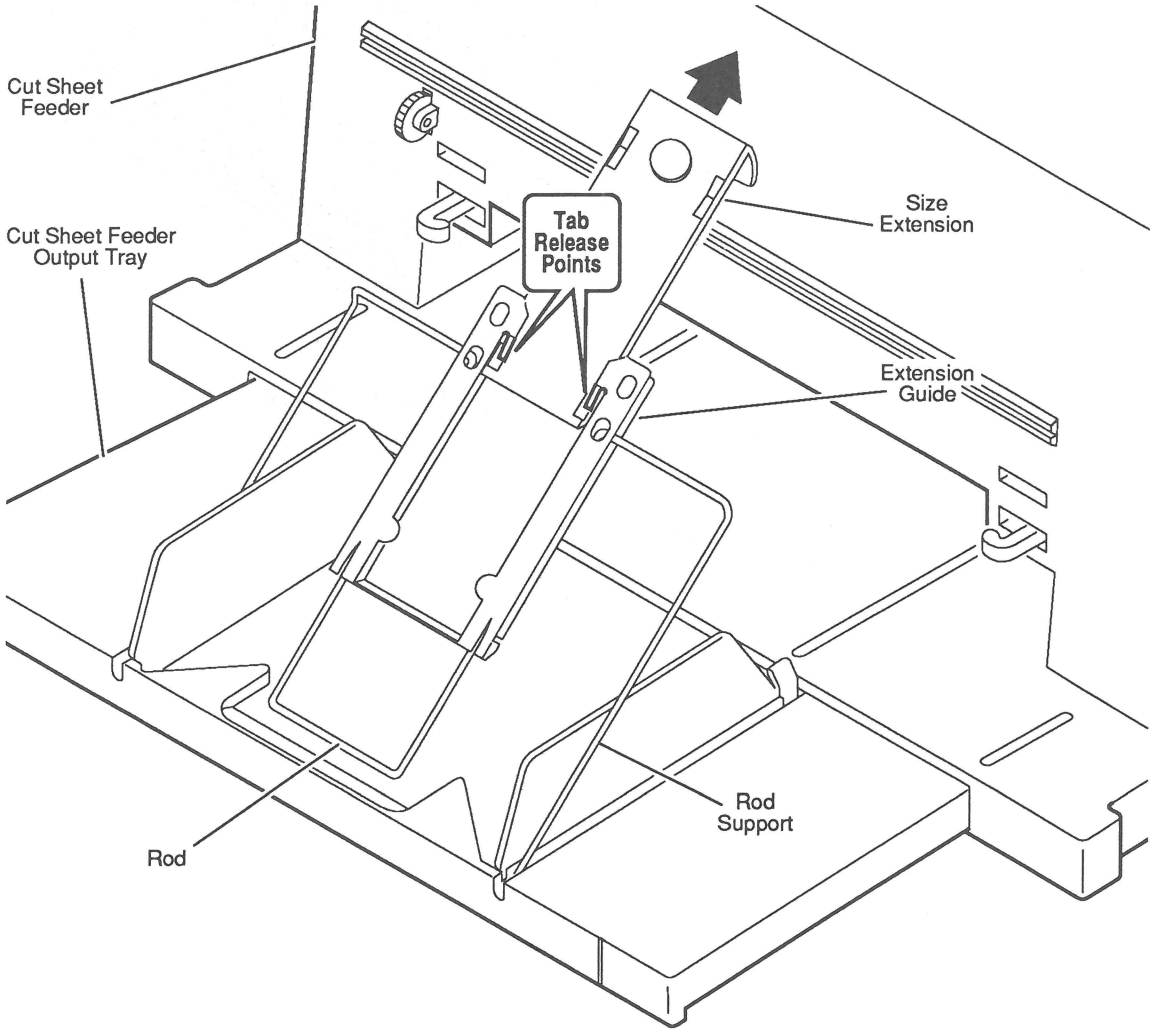


**Figure 2-12 Output Tray Size Extension**

## ❑ CUT SHEET FEEDER OUTPUT TRAY EXTENSION GUIDE AND ROD SUPPORT

**Remove**

1. Separate the cut sheet feeder from the printer (see Section 1, Basics).
2. Open the cut sheet feeder output tray, and remove the cut sheet feeder output tray size extension.
3. Slide the extension guide to the end of the shaft. Using a precision screwdriver, lift up the tabs to free the extension guide from the rod (**Figure 2-13**).
4. If you wish to remove the rod support, press in on the lower ends of the support to free it from the output tray base.

**Replace**

1. To replace the rod support, press in slightly on the ends of the support and insert the ends into the holes on the output tray base.
2. To replace the extension guide, lift the tabs on each side of the guide and slide the guide over the rod.
3. Replace the output tray size extension.

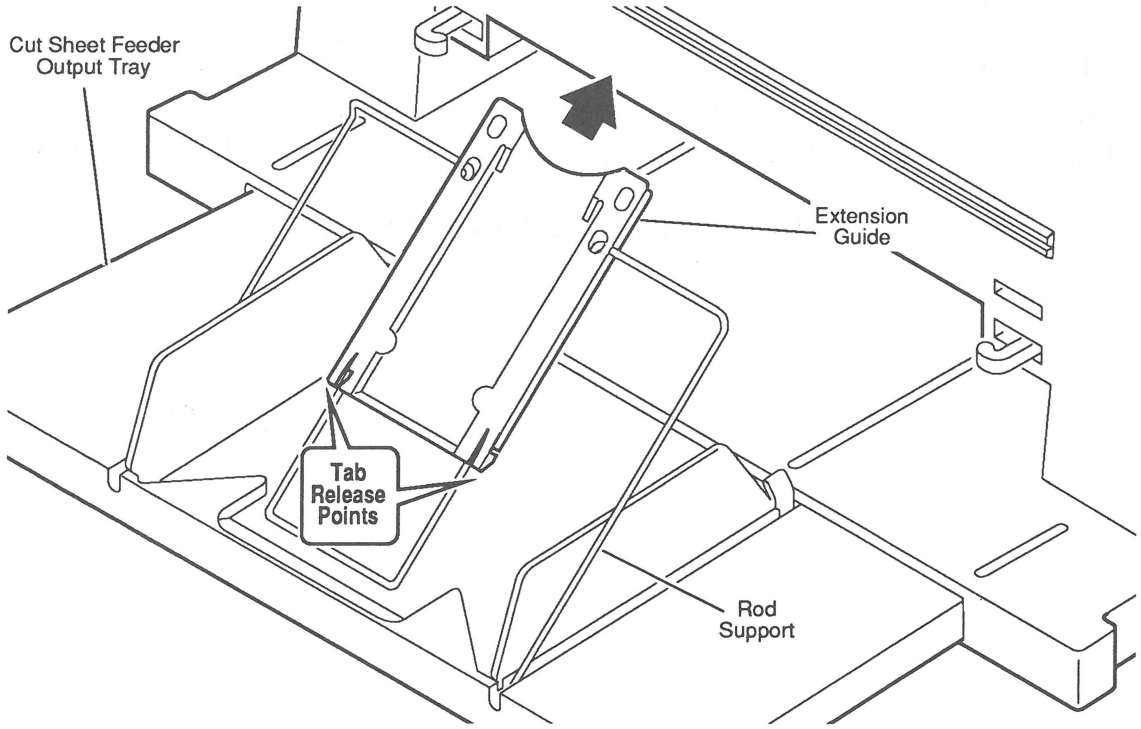


**Figure 2-13 Output Tray Extension Guide**

## ❑ CUT SHEET FEEDER OUTPUT TRAY AND BASE

**Remove**

1. Separate the cut sheet feeder from the printer (see Section 1, Basics).
2. Turn the cut sheet feeder so that you can see the bottom.
3. Remove the two screws (**Figure 2-14**) and lift off the output tray and base assembly.

**Replace**

Position the output tray and base assembly on the bottom of the cut sheet feeder and replace the two screws.

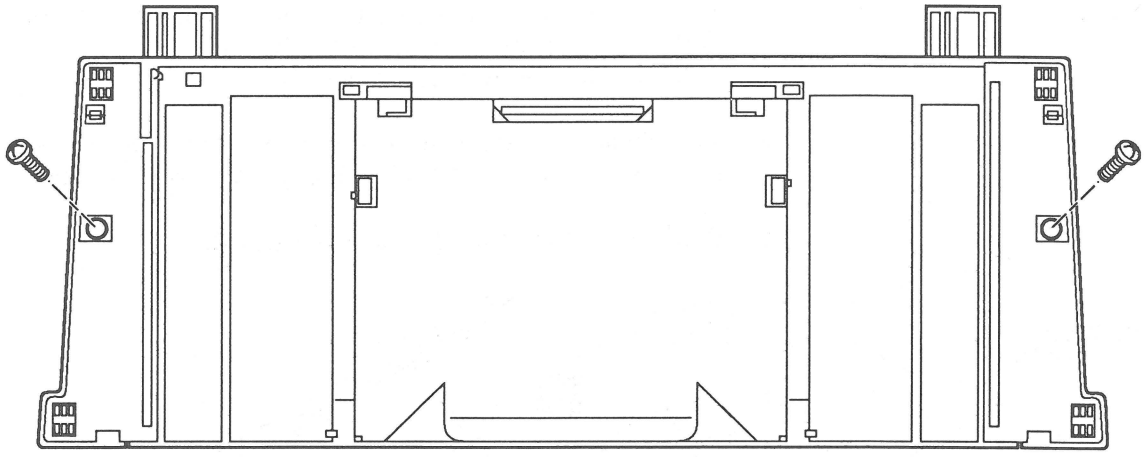

**Figure 2-14 Output Tray and Base**

Apple Technical Procedures

# StyleWriter

## Section 3 – Troubleshooting

## ❑ CONTENTS


3.2 Introduction
3.2 Preliminary Checklist
3.3 How to Use the Symptom/Cure Chart
3.4 Symptom/Cure Chart
3.4 Status Light Problems
3.4 Print Problems
3.6 Carrier Movement Problems
3.6 Paper Feed Problems
3.7 Miscellaneous Problems

## ❑ INTRODUCTION

**Preliminary Checklist**

Some problems may be corrected by simple measures that do not involve taking apart the printer. Before you attempt a repair and before you connect the printer to a computer, attempt to run the test page. If the test page does not run to completion, observe where the process stops working. Also, before you attempt any module replacement, first eliminate all other possible causes for the problem by following the checklist below:

*Software Problems*

Error messages on the Macintosh screen almost always indicate that the problem is software-related (rather than in the printer hardware).

- If the computer cannot find the printer:
  - Check to see that the StyleWriter driver is installed.
  - Check the serial cable connection.
  - Try swapping the serial cable.
- If you get system bombs, try reinstalling the system and printer files.
- If "what you see is not what you get," try known-good application software.

*No Lights/ No Movement*

If you get no response from the printer (no status lights, hum of operation, etc.) the problem is in the power function.

- Be sure the printer is plugged into the power adapter, the adapter is plugged into the wall socket, and the printer is turned on.
- Try another electrical outlet.
- Try replacing the AC power adapter.
- Try replacing the logic board 2.5 amp fuse.

*Print Quality Problems*

If you are seeing problems such as incomplete characters, too much ink, white lines, etc., the problem is almost certainly with the print head (which is contained in the ink cartridge).

- Use correct paper weight.
- Purge the ink cartridge (up to four or five times).
- Try replacing the ink cartridge with known-good.

*Mechanical Problems*

If you are seeing paper feed problems, the problem may be in the cut sheet feeder or paper.

- Use correct paper weight.
- Clear any paper jam.
- Verify proper alignment of the cut sheet feeder with the printer.
- Try replacing the cut sheet feeder.

**How to Use the Symptom/ Cure Chart**

If you cannot solve the problem using the preliminary checklist, use the symptom/cure chart. First, find the symptom that most nearly describes the problem; then perform the first corrective action on the solution list. If that corrective action does not fix the problem, go to the next action. **If you replace a module and find that the problem remains, reinstall the original module before you go on to the next action.**

## ❑ SYMPTOM/CURE CHART

| Status Light Problems | Solutions |
|---|---|
| • *No status lights* | 1. Check AC adapter connection.<br>2. Replace AC adapter.<br>3. Replace fuse.<br>4. Verify that operation cable is securely connected to logic board.<br>5. Replace main logic board.<br>6. Replace operations panel assembly.<br>7. Replace operations panel cable. |
| • *Error and power lights blink; ready light off* | 1. Carriage is jammed. Remove anything that obstructs free motion of carriage.<br>2. Replace main logic board.<br>3. Replace printer frame assembly.<br>4. Replace operations panel assembly.<br>5. Replace operations panel cable. |
| • *Error light blinks; power light on, ready light off* | 1. Close front cover.<br>2. Check to be sure paper is inserted properly.<br>3. Check for paper jam; remove jam, then press ready switch. If ready and power lights come on steadily (and error light is off), the problem is resolved.<br>4. Replace paper sensor.<br>5. Replace main logic board.<br>6. Replace printer frame assembly.<br>7. Replace operations panel assembly.<br>8. Replace operations panel cable. |

| Print Problems | Solutions |
|---|---|
| • *No printing* | 1. Verify that interface cable between printer and computer is tightly connected.<br>2. Make sure printer is selected in Chooser.<br>3. Purge ink cartridge (see Section 1, Basics).<br>4. Replace ink cartridge.<br>5. Replace paper sensor.<br>6. Replace main logic board.<br>7. Replace printer frame assembly. |

- *Garbled printing*

1. Verify that interface cable between printer and computer is tightly connected.
2. Purge ink cartridge (see Section 1, Basics).
3. Replace ink cartridge.
4. Replace main logic board.
5. Replace printer frame assembly.

- *Overprinting*

1. Verify that program being used is set for correct line spacing and line length.
2. Ensure that correct printer driver is installed.
3. Replace main logic board.
4. Replace printer frame assembly.

- *Image too light or too dark*

1. Purge ink cartridge (see Section 1, Basics).
2. Use 16 lb to 24 lb cotton bond paper.
3. Make sure forms thickness lever is set correctly (up for standard paper; down for envelopes, transparencies, labels, and heavy paper).
4. Replace ink cartridge.

- *White lines in printing*

1. Purge ink cartridge (see Section 1, Basics).
2. Replace ink cartridge.
3. Replace main logic board.
4. Replace printer frame assembly.

- *Page prints off center; images out of place*

1. Use 16 lb to 24 lb cotton bond paper.
2. Ensure sheet feeder holds no more than 50 sheets.
3. Set paper correctly in sheet feeder.
4. Ensure that margins in document and paper size in Page Setup are set correctly.
5. Replace main logic board.
6. Replace printer frame assembly.

- *Ink appears on back of paper*

1. Clean platen with a soft, dry cloth.
2. Clean platen rollers.
3. Replace platen rollers.
4. Replace printer frame assembly.

- *Image wavy, splotchy, or distorted*

1. Purge ink cartridge (see Section 1, Basics).
2. Replace ink cartridge.
3. Replace printer frame assembly.

| Carrier Movement Problems | Solutions |
|---|---|
| • *Erratic carrier motion* | 1. Replace main logic board.<br>2. Replace printer frame assembly. |
| • *Power light on, no carrier motion* | 1. Check and, if obstructed, clear carrier area.<br>2. Replace main logic board.<br>3. Replace printer frame assembly. |
| • *Printer will not perform self-test; ready light on* | 1. Replace main logic board.<br>2. Replace operations panel assembly.<br>3. Replace printer frame assembly. |
| • *Carrier grinds, hums loudly, or locks up* | – Replace printer frame assembly. |

| Paper Feed Problems | Solutions |
|---|---|
| • *No paper feed* | 1 Verify alignment of cut sheet feeder with printer.<br>2. Release paper pressure plate on cut sheet feeder.<br>3. Clear paper path if it is obstructed.<br>4. Replace cut sheet feeder.<br>5. Replace main logic board.<br>6. Replace printer frame assembly. |
| • *Grinding during paper feed* | 1. Verify that there are no obstructions in paper path.<br>2. Make sure forms thickness lever is set correctly (up for standard paper; down for envelopes, transparencies, labels, and heavy paper).<br>3. Verify alignment of cut sheet feeder with printer.<br>4. Replace cut sheet feeder.<br>5. Replace main logic board.<br>6. Replace printer frame assembly. |

| | |
|---|---|
| • *Paper feed difficulties: binding, tearing* | 1. Make sure forms thickness lever is set correctly (up for standard paper; down for envelopes, transparencies, labels, and heavy paper).<br>2. Check and, if necessary, clear paper path.<br>3. Verify that paper is correctly installed.<br>4. Use 16 lb to 24 lb cotton bond paper.<br>5. Verify alignment of cut sheet feeder with printer.<br>6. Replace cut sheet feeder.<br>7. Replace printer frame assembly. |
| • *Envelope feed problems* | 1. Since envelopes generally are thicker than cut sheets, the user must:<br>• Make sure to adjust paper thickness lever when printing envelopes.<br>• Reset paper thickness lever when printing on cut sheets is resumed.<br>• Because of the difference in paper thickness between cut sheets and envelopes, do not run cut sheets and envelopes in the same print job.<br>2. Replace printer frame assembly. |

| **Miscellaneous Problems** | **Solutions** |
|---|---|
| • *Operations panel buttons don't work* | 1. Make sure operations panel cable is securely connected to main logic board and operations panel.<br>2. Replace main logic board.<br>3. Replace operations panel.<br>4. Replace operations panel cable. |
| • *Software-specific problem* | 1. Try known-good software.<br>2. Some software is incompatible with TrueType™ fonts. Check your software application manual. |

Apple Technical Procedures

# StyleWriter

## Illustrated Parts List

## ❑ CONTENTS

IPL.3 Exploded View (Figure 1)

Figure 1 includes all piece parts that can be purchased separately from Apple for the StyleWriter printer, along with their part numbers. These are the only parts available from Apple. Refer to your *Apple Service Programs* manual for prices.

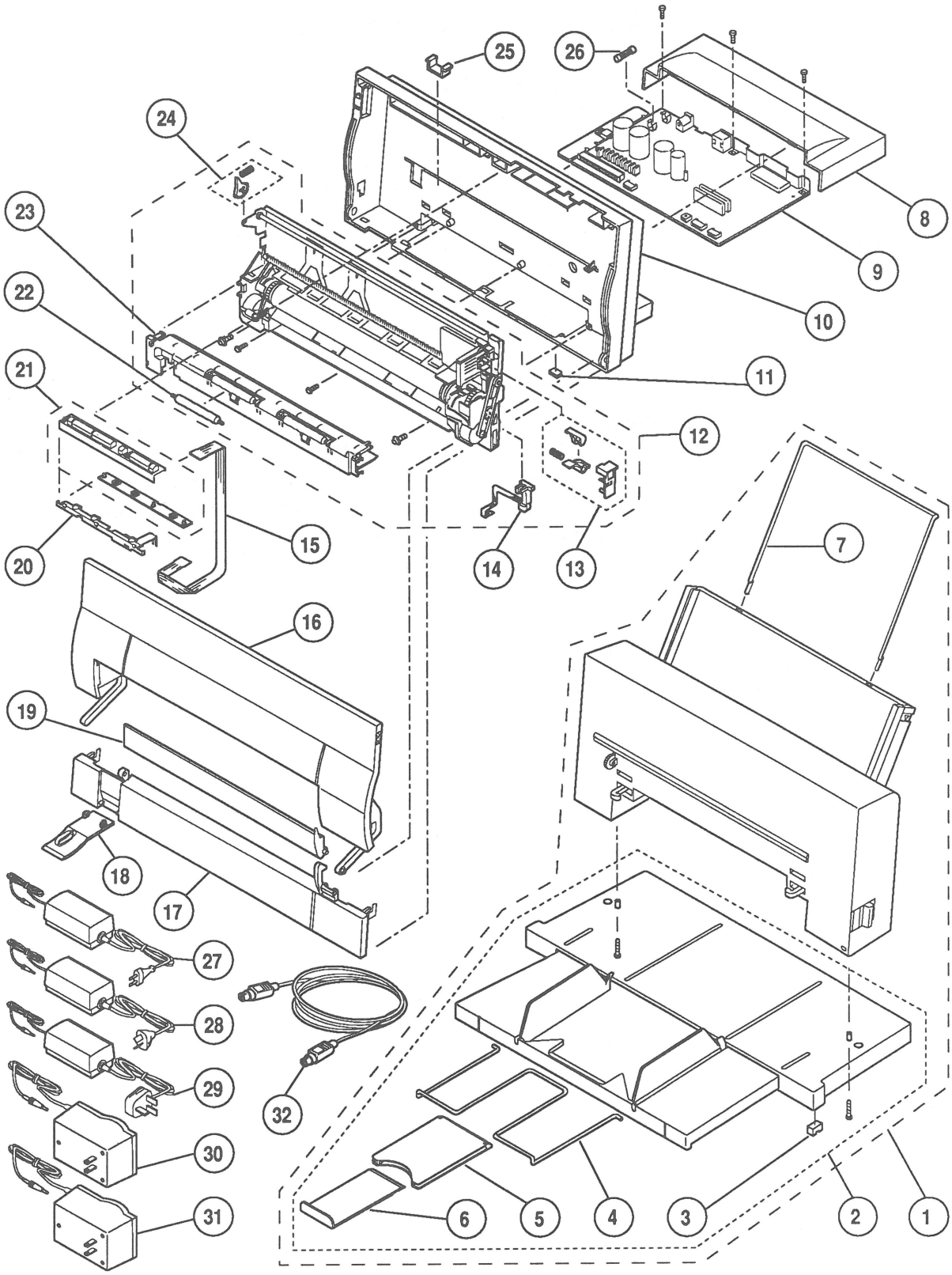


**Figure 1 Exploded View**

## ❑ EXPLODED VIEW (Figure 1)

| Item | Part No. | Description |
|---|---|---|
| 1 | 661-0628 | Cut Sheet Feeder (complete) |
| 2 | 076-0401 | Base & Tray, Cut Sheet Feeder (includes product label, rod support, size extension, and extension guide) |
| 3 | 076-0334 | Foot, Cut Sheet Feeder (10/pack) |
| 4 | 970-0143 | Rod Support, Cut Sheet Feeder Output Tray |
| 5 | 949-0325 | Extension Guide, Cut Sheet Feeder Output Tray |
| 6 | 970-0269 | Size Extension, Cut Sheet Feeder Output Tray |
| 7 | 970-0142 | Rod Support, Paper, Cut Sheet Feeder |
| 8 | 949-0307 | Cover, Main Logic Board |
| 9 | 661-0629 | Main Logic Board (includes fuse) |
| 10 | 076-0400 | Rear Cover (includes product label) |
| 11 | 076-0333 | Printer Foot (10/pack) |
| 12 | 661-0630 | Printer Frame Assembly (includes cartridge hook, paper sensor, forms thickness lever, and platen cover with rollers) |
| 13 | 076-0336 | Cartridge Hook Kit (contains cartridge hook, spring, lever, and holder) |
| 14 | 890-0286 | Paper Sensor |
| 15 | 076-0389 | Operation Panel Cable |
| 16 | 949-0308 | Front Access Cover |
| 17 | 949-0311 | Lower Access Cover |
| 18 | 949-0312 | Paper Release Lever |
| 19 | 949-0319 | Manual Feed Tray |
| 20 | 949-0321 | Operation Panel Shield |
| 21 | 982-0062 | Operation Panel Assembly (includes PCB and cover) |
| 22 | 076-0335 | Output Feed Roller (10/pack) |
| 23 | 949-0309 | Platen Cover (includes rollers) |
| 24 | 076-0388 | Kit, Forms Thickness Lever (contains forms thickness lever and spring) |
| 25 | 952-0014 | Base Retainer Clip (security) |
| 26 | 941-5224 | Fuse, 2.5 Amp, 250 V (10/pack) |
| 27 | Z699-2050 | AC Power Adapter, Europe (220 VAC, 48-62 Hz) |
| 28 | X699-2050 | AC Power Adapter, Australia (240 VAC, 48-62 Hz) |
| 29 | B699-2050 | AC Power Adapter, UK (240 VAC, 48-62 Hz) |
| 30 | J699-2050 | AC Power Adapter, Japan (100-105 VAC, 48-62 Hz) |
| 31 | 699-2050 | AC Power Adapter, USA (120 VAC, 58-62 Hz) |
| 32 | 590-0552 | Apple System/Peripheral-8 Cable |
| – | 076-0337 | Screw Hardware Kit |

***Note:*** The following parts are availabe as part of the screw hardware kit:

Screw for Cut Sheet Feeder base (10/pk)
Screw for RFI shield and mounting logic board (10/pk)
Screw for mounting printer frame (10/pk)